ROHS COMPLIANT

PRODUCT DATA DRAWING

REVISION HISTORY			
REV	DESCRIPTION	DATE	APPROVED
A	DCN 41797	10/15	DAL

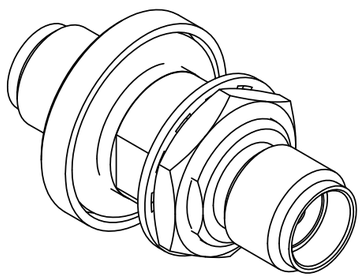

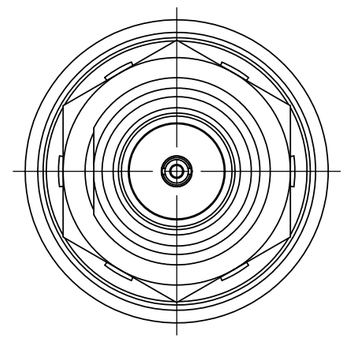

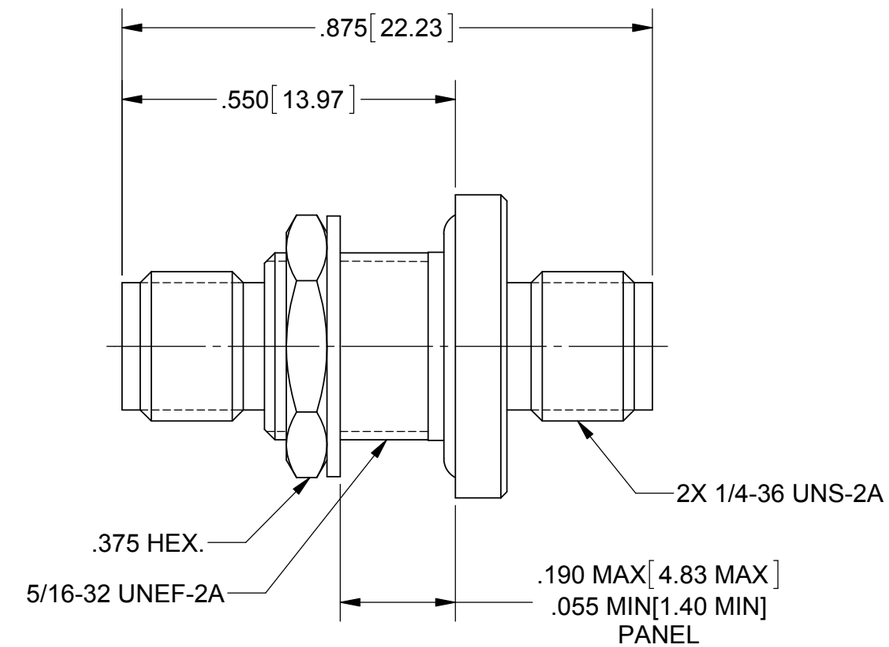

MATERIAL:

BODY & HEX NUT:	STAINLESS STEEL PER AMS-5640, ALLOY UNS S30300, TYPE 1
CONTACTS:	BERYLLIUM COPPER PER ASTM B196, ALLOY No. UNS C17300, TD04
INSULATORS:	PTFE PER ASTM D1710, TYPE I, GRADE 1, CLASS B
O-RING:	SILICONE RUBBER PER A-A-59588, CLASS 2B, GRADE 50/60
LOCKWASHER:	300 SERIES STAINLESS STEEL
GLASS:	EN1 OR EQUIVALENT
PIN:	KOVAR

FINISH:

BODY, HEX NUT & WASHER:	PASSIVATED PER AMS-2700
CONTACTS:	GOLD PER ASTM B488, TYPE II, CODE C, CLASS 0.76, OVER NICKEL PER AMS-QQ-N-290, CLASS 1, .00005" MIN.
PIN:	NICKEL PER AMS-QQ-N-290, CLASS 1

PERFORMANCE:

IMPEDANCE:	50 OHMS
FREQ. RANGE:	DC TO 18.0 GHz

RECOMMENDED MOUNTING HOLE

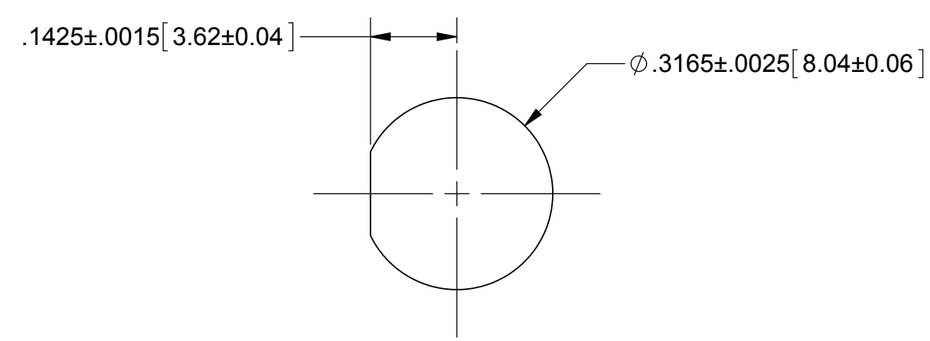

MATERIAL: SEE NOTES	DIMENSIONS ARE IN INCHES TOLERANCES: FRACTIONAL: ±1/64 ANGULAR: X° ±1°0' X°X' ±15' DECIMAL: .X ±.030 .XX ±.010 .XXX ±.005 INTERPRET DIMENSIONS AND TOLERANCES PER ASME Y14.5M - 1994	UNLESS OTHERWISE SPECIFIED 1) ALL DIMENSIONS ARE IN INCHES [MILLIMETERS] 2) ALL DIMENSIONS ARE AFTER PLATING. 3) BREAK CORNERS & EDGES .005 R. MAX. 4) CHAM. 1ST & LAST THREADS. 5) SURFACE ROUGHNESS 63 MIL-STD-10. 6) DIA.'S ON COMMON CENTERS TO BE CONCENTRIC WITHIN .005 T.I.R. 7) REMOVE ALL BURRS	**SV Microwave, Inc.** 2400 Centrepark West Drive, Suite 100 West Palm Beach, FL 33409
FINISH: SEE NOTES			TITLE: SMA JACK TO JACK BULKHEAD ADAPTER HERMETIC SEAL
SURFACE AREA: N/A	THIRD ANGLE PROJECTION	DRAWN: BNK 10/29/15	SIZE B · CAGE CODE 95077 · DWG. NO. SF2991-6002
PROPRIETARY		CHECKED: DAL 10/29/15	
THE INFORMATION CONTAINED IN THIS DRAWING IS THE SOLE PROPERTY OF SV MICROWAVE, INC. ANY REPRODUCTION IN PART OR AS A WHOLE WITHOUT THE WRITTEN PERMISSION OF SV MICROWAVE, INC IS PROHIBITED.		APPROVED: DGG 02/26/79	SCALE: 4:1 · SHEET 1 OF 1