MAT'L NO.	ENG NO.	MAT'L NO. (TAPE)	ENG NO. (TAPE)	WIRE AWG	1 MWID	ID MIN	INSULATION COLOR
191640009	SA-259	- - - -	- - - -	22 - 18	.235 (5.97)	.054 (1.35)	RED
191640039	SB-279	191640314	SB-279T	16 - 14	.230 (5.84)	.080 (2.03)	BLUE

C2

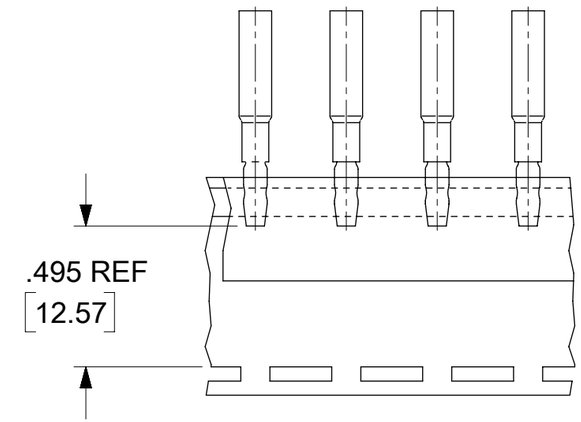

PARTS ON TAPE

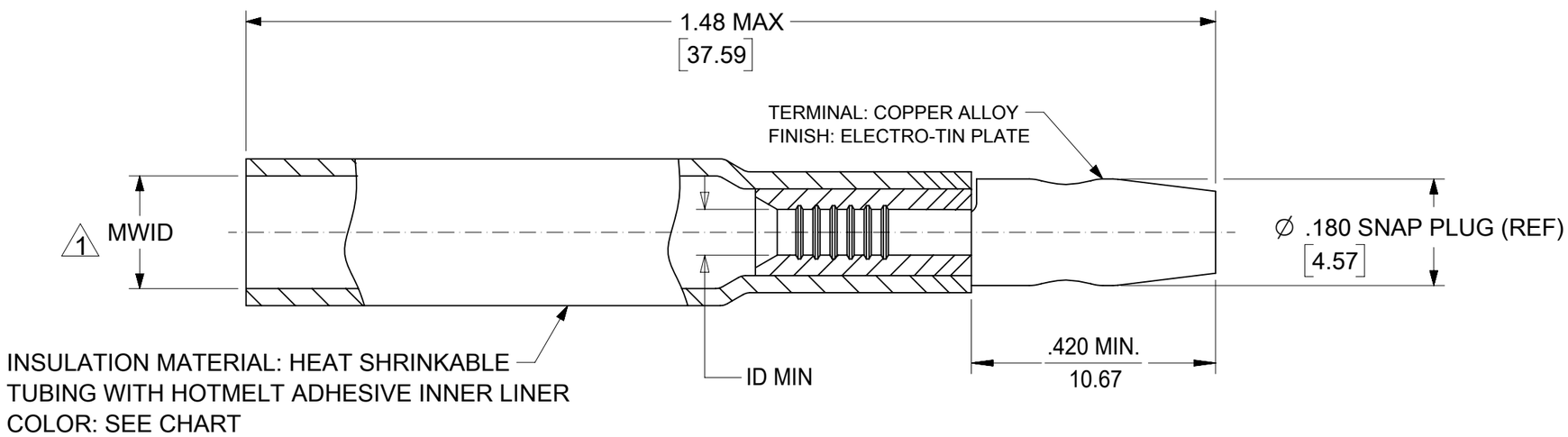

NOTE(S):

1. MWID: MAXIMUM WIRE INSULATION DIAMETER
2. PART IS RoHS COMPLIANT.

THIS DRAWING CONTAINS INFORMATION THAT IS PROPRIETARY TO MOLEX ELECTRONIC TECHNOLOGIES, LLC AND SHOULD NOT BE USED WITHOUT WRITTEN PERMISSION

FUNCTIONAL SYMBOLS: EA = 0, EC = 0, EP = 0

DIVISIONAL SYMBOLS

DIMENSION UNITS: INCH/MM

SCALE: 1:1

GENERAL TOLERANCES (UNLESS SPECIFIED)

	MM	INCH
4 PLACES	±	±
3 PLACES	±	± 0.01
2 PLACES	± 0.25	± 0.02
1 PLACE	± 0.5	±
0 PLACES	±	±
ANGULAR TOL	± 1.0 °	

DRAFT WHERE APPLICABLE MUST REMAIN WITHIN DIMENSIONS

CURRENT REV DESC: CORRECTED ENG NO

EC NO: 769404
DRWN: DEANNM1 2023/11/20
CHK'D: ETHRODAHL 2023/11/20
APPR: ETHRODAHL 2023/11/20

INITIAL REVISION:
DRWN: BENDERLE 2004/09/10
APPR: RDEROSS 2004/09/13

THIRD ANGLE PROJECTION | DRAWING: B-SIZE | SERIES: 19164

molex

.180/4.57 SNAP PLUG
NIAC 22-18 16-14 AWG

PRODUCT CUSTOMER DRAWING

DOCUMENT NUMBER	DOC TYPE	DOC PART	REVISION
SD-19164-068	PSD	001	C2

MATERIAL NUMBER	CUSTOMER	SHEET NUMBER
SEE CHART	GENERAL MARKET	1 OF 1

DOCUMENT STATUS	P1	RELEASE DATE	2023/11/20 18:19:31

FORMAT: Eng-lega-master-tb-prod-B
REVISION: E1
DATE: 2021/05/01