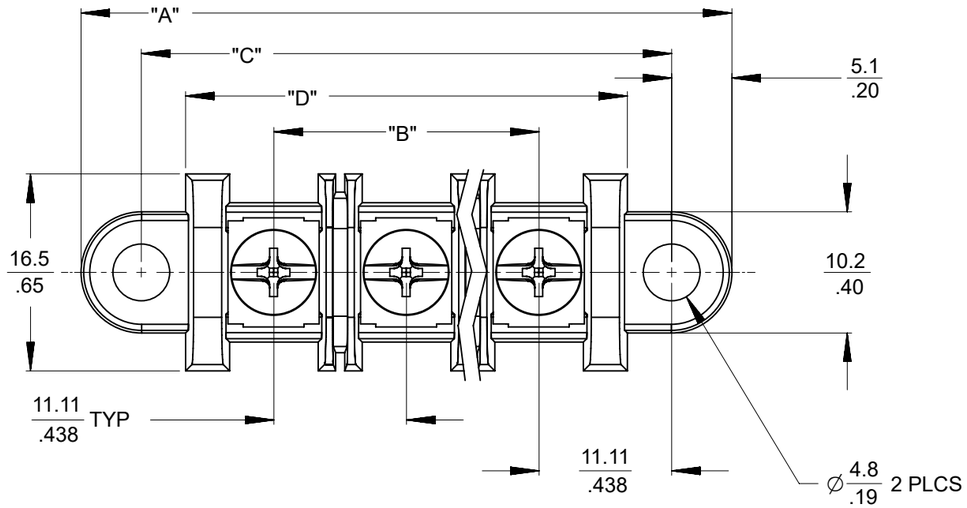

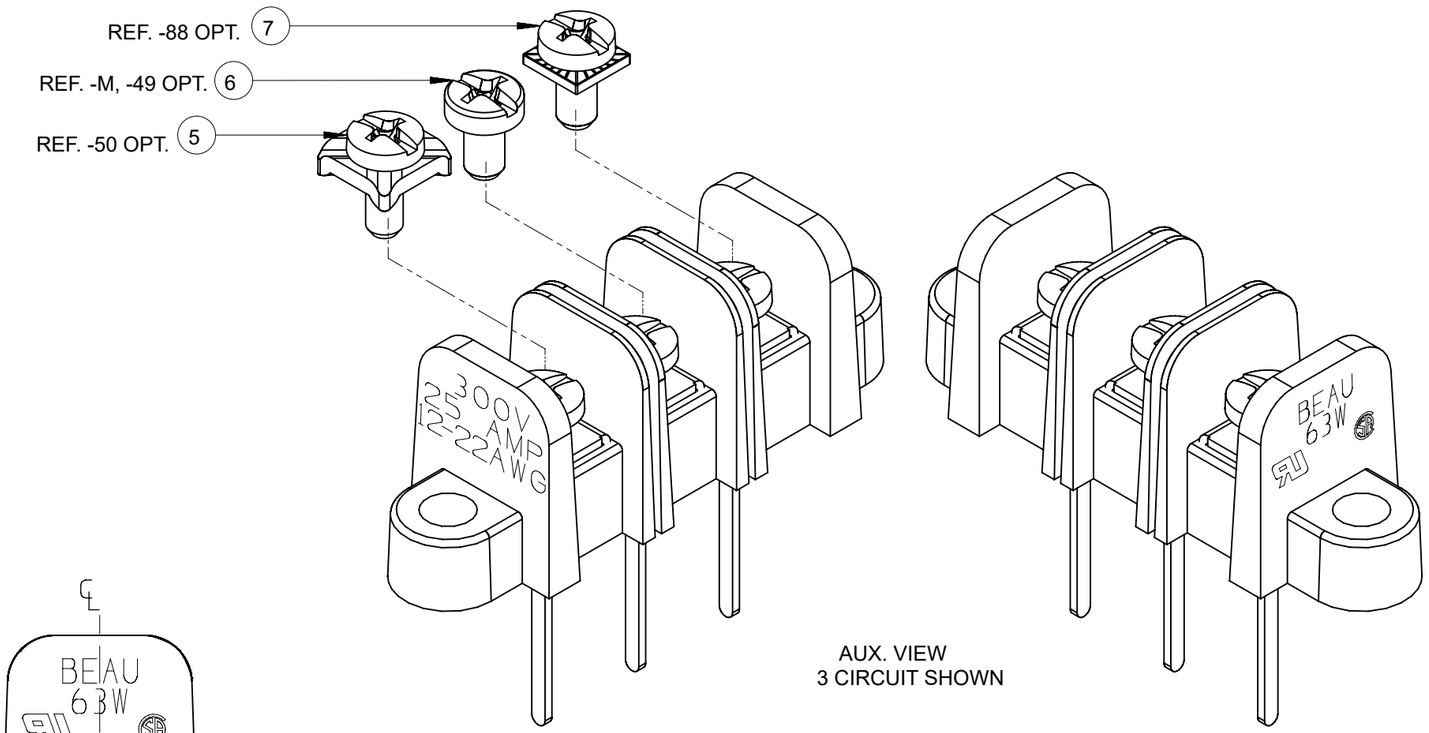

AUX. VIEW
3 CIRCUIT SHOWN

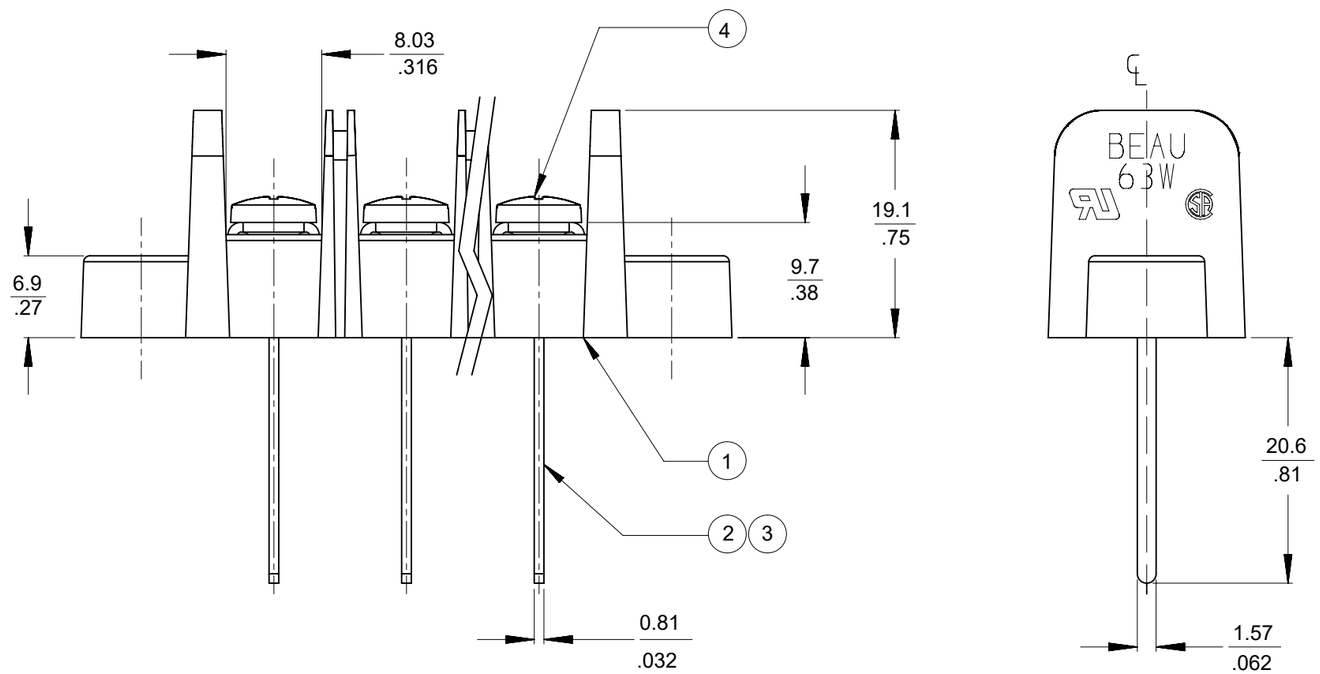

NOTES:

1. MATERIAL: SEE TABLE
2. FINISHES: SEE TABLE
3. "XX" REFERS TO THE QUANTITY OF CIRCUITS.
4. SCREWS SUPPLIED UNASSEMBLED WITH -59 OPTION.
5. ROHS COMPLIANT.

ITEM	QTY.	DESCRIPTION	MATERIAL	FINISH
7	XX	SCREW, M3.5X0.6X.304, CHSHD, POSI-SL, SQ/WSHR (-88 OPT)	STEEL	ZINC CHROMATE
6	XX	SCREW, M3.5X0.6X6MM PAN HD, PHIL-SLOT (-M, -49 OPT	BRASS	NICKEL PLATE
5	XX	SCREW, #6-32X.250 BHD, PHIL-SLOT, SQ. WASHER (-50 OPT)	STEEL	ZN, CLEAR CHROMATE
4	XX	SCREW, #6-32X.250 BHD, PHIL-SLOT (STD OPT)	STEEL	ZN, CLEAR CHROMATE
3	XX	TERMINAL, WW, EXTRA LONG, -M OPT, -88 OPT	BRASS	TIN PLATE
2	XX	TERMINAL, WW, EXTRA LONG	BRASS	TIN PLATE
1	1	INSULATOR, SR, PC, MOLDED MTG	POLYESTER (PBT)	BLACK

DOCUMENT STATUS | P1 | RELEASE DATE | 2023/07/18 08:19:52

THIS DRAWING CONTAINS INFORMATION THAT IS PROPRIETARY TO MOLEX ELECTRONIC TECHNOLOGIES, LLC AND SHOULD NOT BE USED WITHOUT WRITTEN PERMISSION

FUNCTIONAL SYMBOLS: EA = 0, EC = 0, EP = 0
DIVISIONAL SYMBOLS

DIMENSION UNITS: mm/IN
SCALE: 2:1

GENERAL TOLERANCES (UNLESS SPECIFIED)

	MM	INCH
4 PLACES	±	±
3 PLACES	±	± 0.005
2 PLACES	± 0.13	± 0.01
1 PLACE	± 0.3	±
0 PLACES	±	±
ANGULAR TOL	± 2.0 °	

DRAFT WHERE APPLICABLE MUST REMAIN WITHIN DIMENSIONS

CURRENT REV DESC: REMOVED OBSOLETED PART NUMBERS AS PER PCN#512132

EC NO: 754285
DRWN: MADHAM5 2023/06/09
CHK'D: GGA 2023/07/18
APPR: GGA 2023/07/18

INITIAL REVISION:
DRWN: R. KEMP 2005/08/17
APPR: JMACNEIL 2014/03/10

THIRD ANGLE PROJECTION | DRAWING: B-SIZE | SERIES: 38639

molex

11.11/.438 SR BTS ASSY
NO PADS, 81

PRODUCT CUSTOMER DRAWING

DOCUMENT NUMBER	DOC TYPE	DOC PART	REVISION
SD-38639-006	PSD	001	B1

MATERIAL NUMBER	CUSTOMER	SHEET NUMBER
SEE CHART	GENERAL MARKET	1 OF 2

FORMAT: Eng-lega-master-tb-prod-B
REVISION: E1
DATE: 2021/05/01

NO. OF CIRCUITS "XX"	DIM. "A" mm	DIM. "A" in	DIM. "B" mm	DIM. "B" in	DIM. "C" mm	DIM. "C" in	DIM. "D" mm	DIM. "D" in	ASSEMBLY MATERIAL NO. (-W-81)	ASSEMBLY MATERIAL NO. (-W-50-81)	ASSEMBLY MATERIAL NO. (-W-81-88)
02	43.4	1.71	11.11	.438	33.34	1.313	25.9	1.02	386390021		386390054
03	54.5	2.15	22.23	.875	44.45	1.750	37.0	1.46	386390025	386390027	
04	65.7	2.59	33.34	1.313	55.56	2.188	48.1	1.90	386390031		386390055
05	76.8	3.02	44.45	1.750	66.68	2.625	59.2	2.33	386390033		
06	87.9	3.46	55.56	2.188	77.79	3.063	70.4	2.77	386390036		
07	99.0	3.90	66.68	2.625	88.90	3.500	81.5	3.21	386390010		
08	110.1	4.34	77.79	3.063	100.01	3.938	92.6	3.65	386390011		
09	121.2	4.77	88.90	3.500	111.13	4.375	103.7	4.08	386390012		
10	132.3	5.21	100.01	3.938	122.24	4.813	114.8	4.52	386390013		
11	143.4	5.65	111.13	4.375	133.35	5.250	125.9	4.96	386390014		
12	154.6	6.09	122.24	4.813	144.46	5.688	137.0	5.40	386390015		

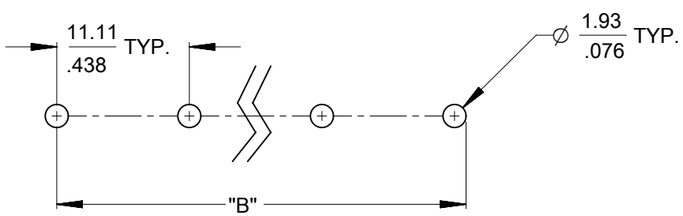

RECOMMENDED PCB LAYOUT

FUNCTIONAL SYMBOLS
= 0
= 0
= 0

DIVISIONAL SYMBOLS

THIS DRAWING CONTAINS INFORMATION THAT IS PROPRIETARY TO MOLEX ELECTRONIC TECHNOLOGIES, LLC AND SHOULD NOT BE USED WITHOUT WRITTEN PERMISSION

DIMENSION UNITS: mm/IN
SCALE: 2:1

GENERAL TOLERANCES (UNLESS SPECIFIED)

	MM	INCH
4 PLACES	±	±
3 PLACES	±	± 0.005
2 PLACES	± 0.13	± 0.01
1 PLACE	± 0.3	±
0 PLACES	±	±
ANGULAR TOL	± 2.0 °	

DRAFT WHERE APPLICABLE MUST REMAIN WITHIN DIMENSIONS

CURRENT REV DESC: REMOVED OBSOLETED PART NUMBERS AS PER PCN#512132

EC NO: 754285
DRWN: MADHAM5 2023/06/09
CHK'D: GGA 2023/07/18
APPR: GGA 2023/07/18

INITIAL REVISION:
DRWN: R. KEMP 2005/08/17
APPR: JMACNEIL 2014/03/10

THIRD ANGLE PROJECTION | DRAWING: B-SIZE | SERIES: 38639

molex

11.11/.438 SR BTS ASSY
NO PADS, 81

PRODUCT CUSTOMER DRAWING

DOCUMENT NUMBER	DOC TYPE	DOC PART	REVISION
SD-38639-006	PSD	001	B1

MATERIAL NUMBER	CUSTOMER	SHEET NUMBER
SEE CHART	GENERAL MARKET	2 OF 2

DOCUMENT STATUS	P1	RELEASE DATE	2023/07/18 08:19:52

FORMAT: Eng-lega-master-tb-prod-B
REVISION: E1
DATE: 2021/05/01