| NO. OF CIRC. | DIM "A" mm | DIM "A" INCH | DIM "B" mm | DIM "B" INCH | KIT MAT # |
|---|---|---|---|---|---|
| 2 | 31.0 | [1.22] | 21.3 | [.84] | 387736402 |
| 3 | 40.4 | [1.59] | 30.9 | [1.21] | 387736403 |
| 4 | 50.0 | [1.97] | 40.4 | [1.59] | 387736404 |
| 5 | 59.4 | [2.34] | 49.9 | [1.96] | 387736405 |
| 6 | 69.0 | [2.72] | 59.4 | [2.34] | 387736406 |
| 7 | 78.5 | [3.09] | 69.0 | [2.71] | 387736407 |
| 8 | 88.0 | [3.47] | 78.5 | [3.09] | 387736408 |
| 9 | 97.5 | [3.84] | 88.0 | [3.46] | 387736409 |
| 10 | 107.1 | [4.22] | 97.5 | [3.84] | 387736410 |
| 11 | 116.6 | [4.59] | 107.1 | [4.21] | 387736411 |
| 12 | 126.1 | [4.97] | 116.6 | [4.59] | 387736412 |
| 13 | 135.6 | [5.34] | 126.1 | [4.96] | 387736413 |
| 14 | 145.2 | [5.72] | 135.6 | [5.34] | 387736414 |
| 15 | 154.7 | [6.09] | 145.2 | [5.71] | 387736415 |
| 16 | 164.2 | [6.47] | 154.7 | [6.09] | 387736416 |
| 17 | 173.7 | [6.84] | 164.2 | [6.46] | 387736417 |
| 18 | 183.3 | [7.22] | 173.7 | [6.84] | 387736418 |
| 19 | 192.8 | [7.59] | 183.3 | [7.21] | 387736419 |
| 20 | 202.3 | [7.97] | 192.8 | [7.59] | 387736420 |
| 21 | 211.8 | [8.34] | 202.3 | [7.96] | 387736421 |
| 22 | 221.4 | [8.72] | 211.8 | [8.34] | 387736422 |
| 23 | 231.0 | [9.09] | 221.4 | [8.71] | 387736423 |
| 24 | 240.4 | [9.47] | 230.9 | [9.09] | 387736424 |
| 25 | 250.0 | [9.84] | 240.4 | [9.46] | 387736425 |
| 26 | 259.5 | [10.22] | 249.9 | [9.84] | 387736426 |
| 27 | 269.0 | [10.59] | 259.5 | [10.21] | 387736427 |
| 28 | 278.5 | [10.97] | 269.0 | [10.59] | 387736428 |
| 29 | 288.0 | [11.34] | 278.5 | [10.96] | 387736429 |
| 30 | 297.6 | [11.72] | 288.0 | [11.34] | 387736430 |

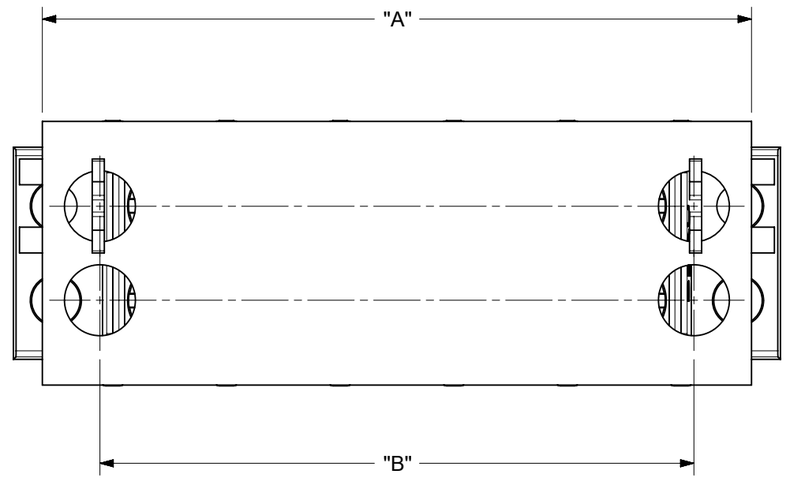


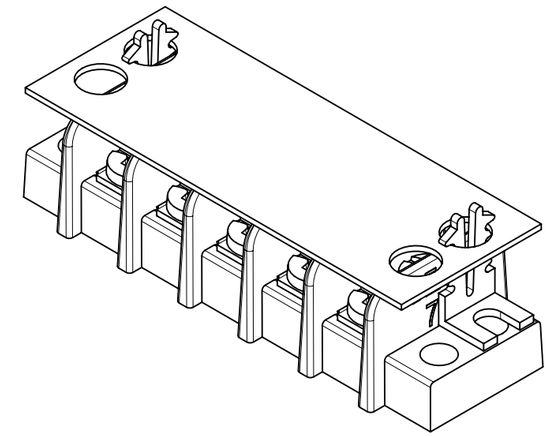

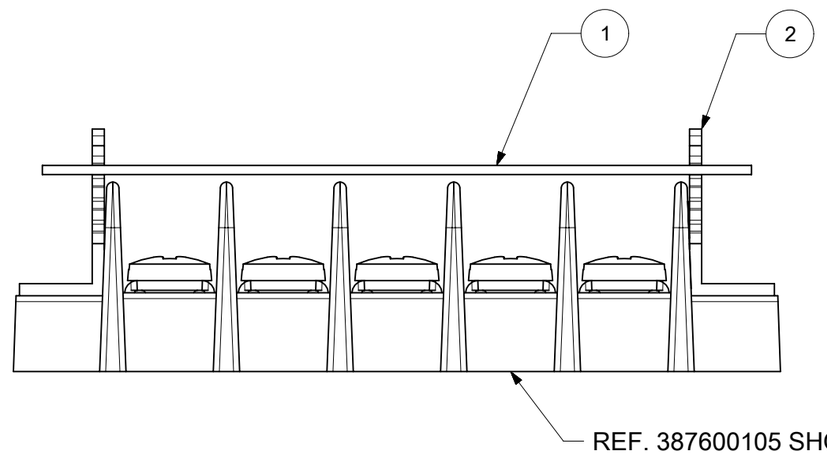


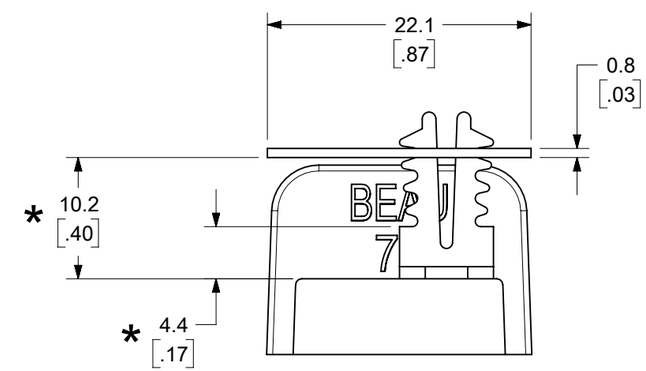


NOTES:
1. MATERIAL: SEE TABLE
2. FINISHES: SEE TABLE
3. PRODUCT SPECIFICATION: NOT REQUIRED
4. PARTS SUPPLIED UNASSEMBLED
5. MATES WITH: 14, 76 AND 77 SERIES BTS
6. ( * ) DIMENSIONS INDICATE MAX. AND MIN. COVER HEIGHT
7. ROHS COMPLIANT

| ITEM | QTY. | DESCRIPTION | MATERIAL | FINISH |
|---|---|---|---|---|
| 2 | 2 | COVER CLIPS | ACETAL | NATURAL |
| 1 | 1 | BTS COVER | VULCANIZED FIBER | BLACK |

| DOCUMENT STATUS | P1 | RELEASE DATE | 2020/08/11 15:46:07 |
|---|---|---|---|

| TOLERANCES | | | |
|---|---|---|---|
| MM | TOL | INCH | TOL |
| 0-6 | ±0.25 | 0-.24 | ±.010 |
| >6-30 | ±0.40 | .24-1.18 | ±.016 |
| >30-120 | ±0.50 | 1.18-4.76 | ±.020 |
| >120 | ±0.80 | >4.76 | ±.031 |

FUNCTIONAL SYMBOLS: EA = 0, EC = 0, EP = 0
DIVISIONAL SYMBOLS

THIS DRAWING CONTAINS INFORMATION THAT IS PROPRIETARY TO MOLEX ELECTRONIC TECHNOLOGIES, LLC AND SHOULD NOT BE USED WITHOUT WRITTEN PERMISSION

DIMENSION UNITS: MM/INCH
SCALE: 2:1

GENERAL TOLERANCES (UNLESS SPECIFIED)

| | MM | INCH |
|---|---|---|
| 4 PLACES | ± --- | ± --- |
| 3 PLACES | ± --- | ± SEE CHART |
| 2 PLACES | ± SEE CHART | ± SEE CHART |
| 1 PLACE | ± SEE CHART | ± --- |
| 0 PLACES | ± --- | ± --- |
| ANGULAR TOL | ± --- | |

DRAFT WHERE APPLICABLE MUST REMAIN WITHIN DIMENSIONS

CURRENT REV DESC: MIGRATED TO ECTR/NX & ADDED TOLERANCE TABLE

EC NO: 639830
DRWN: ABENJAMINLW 2020/05/20
CHK'D: MBRZOZOWSKI 2020/05/27
APPR: JFMURPHY 2020/08/11

INITIAL REVISION:
DRWN: JENCINAS 2009/04/09
APPR: JMACNEIL 2009/04/13

THIRD ANGLE PROJECTION | DRAWING: B-SIZE | SERIES: 38773

molex

BTS COVER KIT, FLAT

PRODUCT CUSTOMER DRAWING

| DOCUMENT NUMBER | DOC TYPE | DOC PART | REVISION |
|---|---|---|---|
| SD-38773-001 | PSD | 001 | B1 |

| MATERIAL NUMBER | CUSTOMER | SHEET NUMBER |
|---|---|---|
| SEE CHART | GENERAL MARKET | 1 OF 1 |

FORMAT: Eng-lega-master-tb-prod-B
REVISION: E
DATE: 2020/01/14