MATERIALS AND FINISHES:

BODY, JAM NUT: BRASS
PLATED NICKEL

CENTER CONTACT: BRASS
PLATED GOLD

INSULATOR: PTFE

POST: BRASS
PLATED TIN

LOCK WASHER: PHOSPHOR BRONZE
PLATED NICKEL

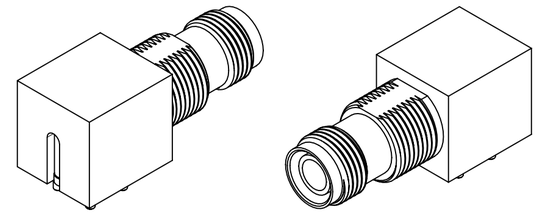

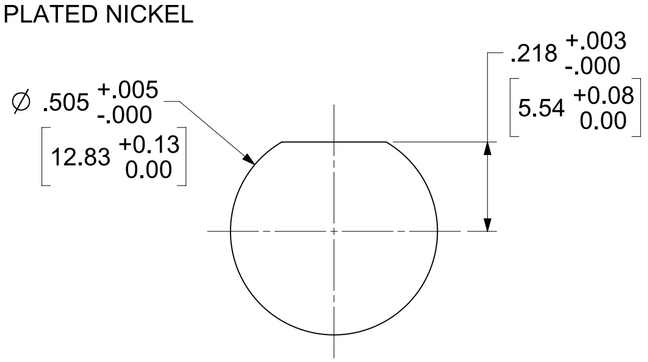

RECOMMENDED PANEL CUTOUT

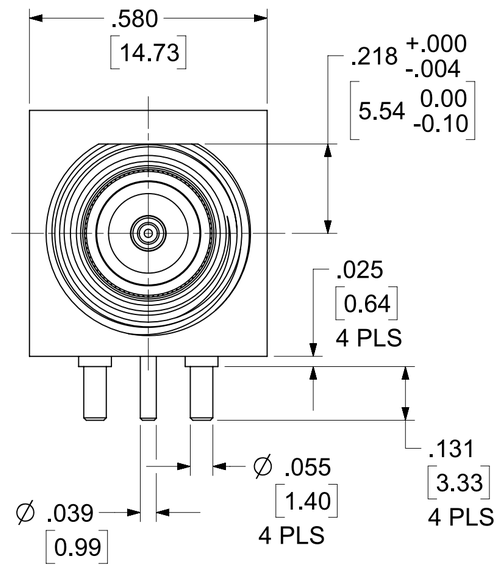

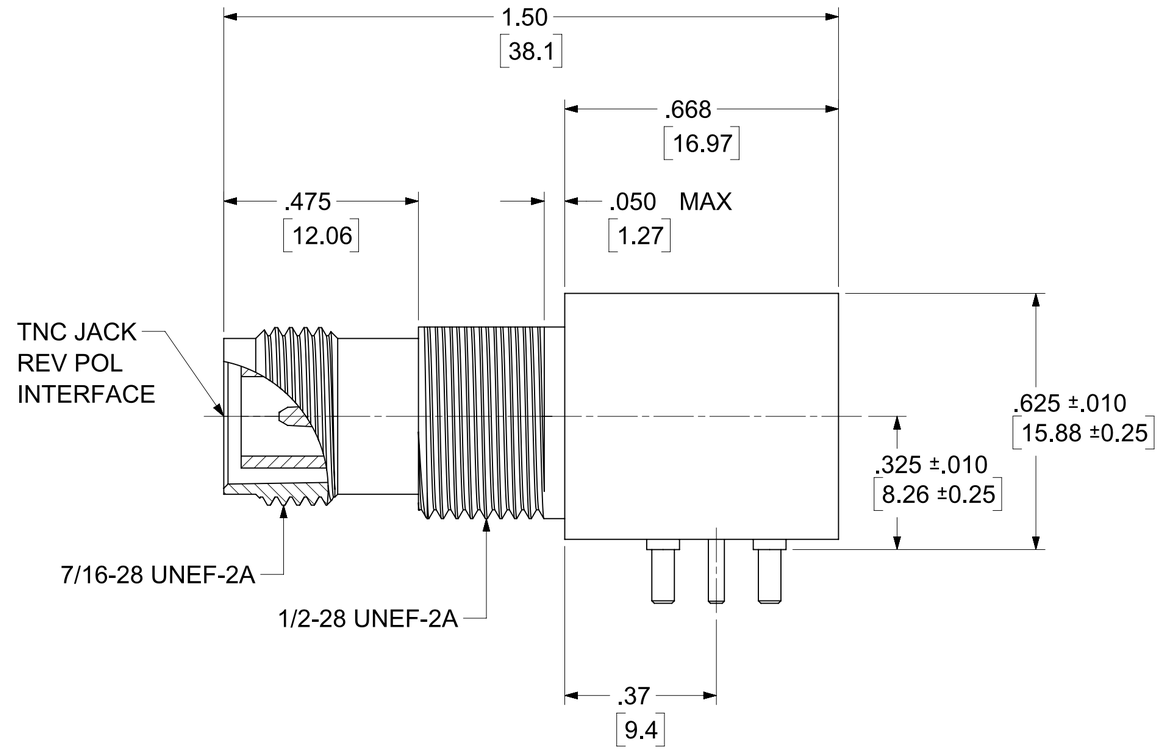

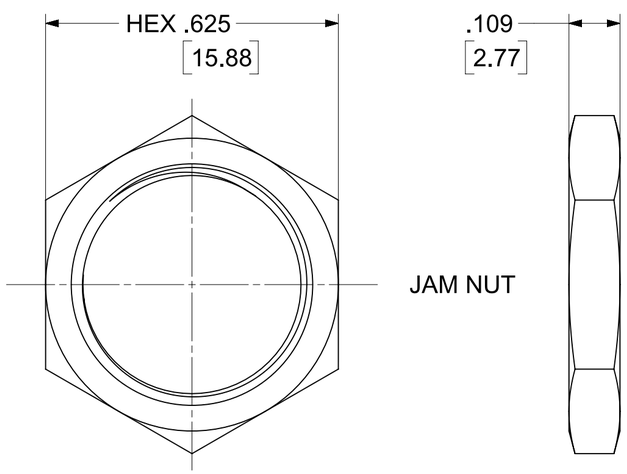

JAM NUT

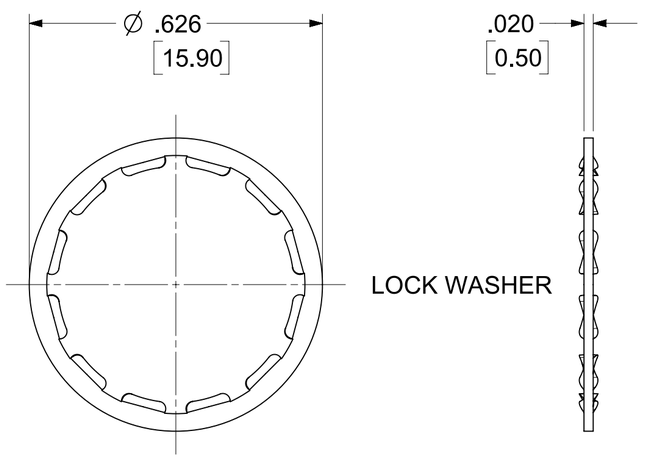

LOCK WASHER

HARDWARE

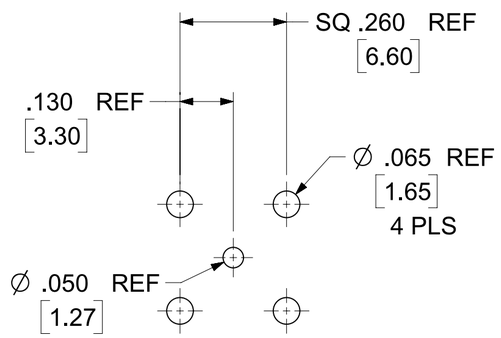

RECOMMENDED PCB LAYOUT

73216-1502	INCLUDED	73216-1502 TRAY	895420605
73216-1501	NOT INCLUDED	73216-1500 ONE PER BAG	895420610
73216-1500		73216-1500 TRAY	895420604
PART NO.	HARDWARE	DESCRIPTION	PACKING SPEC

THIS DRAWING CONTAINS INFORMATION THAT IS PROPRIETARY TO MOLEX ELECTRONIC TECHNOLOGIES, LLC AND SHOULD NOT BE USED WITHOUT WRITTEN PERMISSION

FUNCTIONAL SYMBOLS
FA = 0
FC = 0
FP = 0
DIVISIONAL SYMBOLS

DIMENSION UNITS: IN/MM
SCALE: NTS

GENERAL TOLERANCES (UNLESS SPECIFIED)

	MM	INCH
4 PLACES	±	±
3 PLACES	±	± 0.0050
2 PLACES	± 0.130	± 0.010
1 PLACE	± 0.25	±
0 PLACES	±	±
ANGULAR TOL	± 2.0°	

DRAFT WHERE APPLICABLE MUST REMAIN WITHIN DIMENSIONS

CURRENT REV DESC: ADD GENERAL TOLERANCE

PHASE:
CO NO:
DRWN: Ricky Yeh 2023-08-23
CHK'D: Kerrie Chen 2023-09-04
APPR: Darry Cheng 2023-09-04

INITIAL REVISION:
DRWN: SSS 2005/01/26
APPR: JDW 2005/01/26

THIRD ANGLE PROJECTION | DRAWING: C-SIZE | SERIES: 73216

molex

TNC JACK, R/A, REV POL
50 OHMS, PCB, BLKHD

PRODUCT SALES DRAWING

DOCUMENT NUMBER	DOC TYPE	DOC PART	REVISION
SD-73216-150	PSD	001	A3

MATERIAL NUMBER	CUSTOMER	SHEET NUMBER
SEE TABLE	GENERAL MARKET	1 OF 1

FORMAT: EngAngle-TCdb-prod-C
REVISION: A
DATE: 2021/08/11