MATERIALS AND FINISHES:

BODY: STAINLESS STEEL
PLATED GOLD (SEE TABLE)

COUPLING NUT: STAINLESS STEEL
PASSIVATED -0031 -0032 -0033
PLATED GOLD (8 u" MIN) -0034

CENTER CONTACT: BRASS
PLATED GOLD (SEE TABLE)

INSULATOR: TEFLON

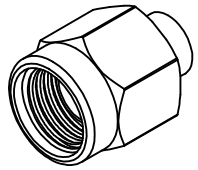

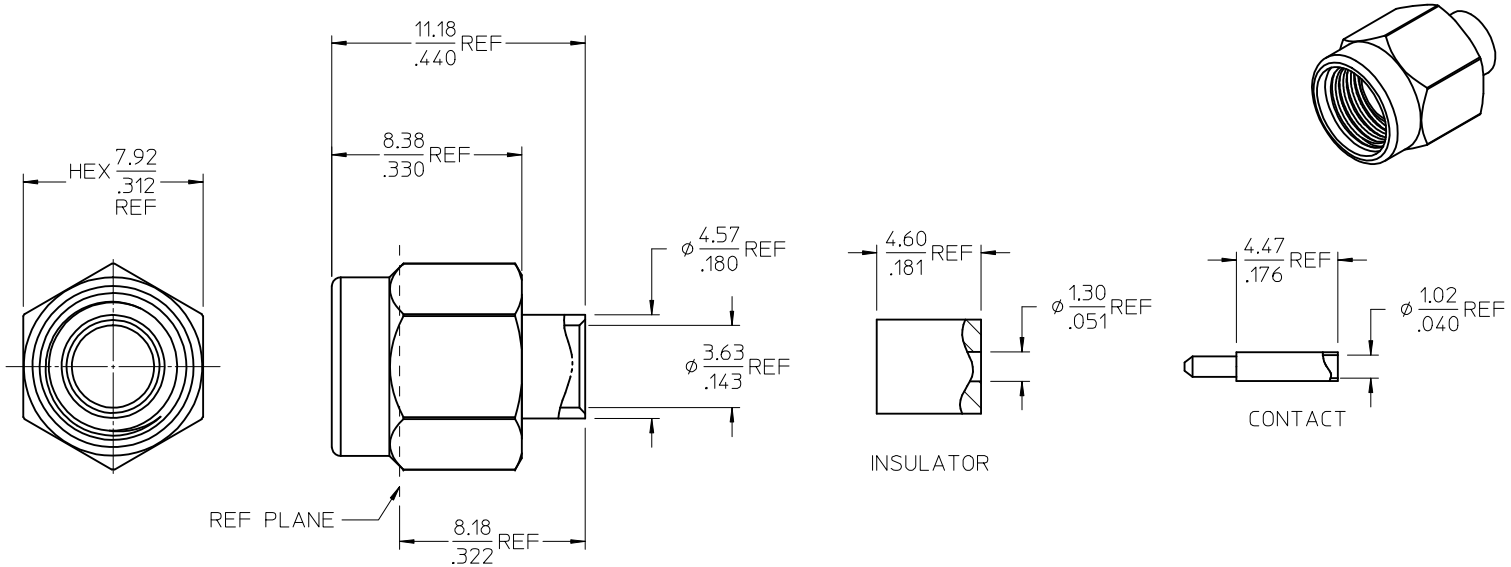

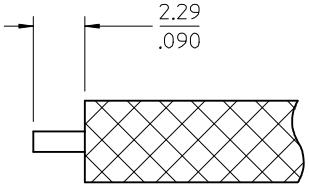

RG402 CABLE STRIP

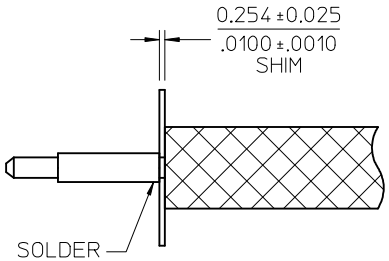

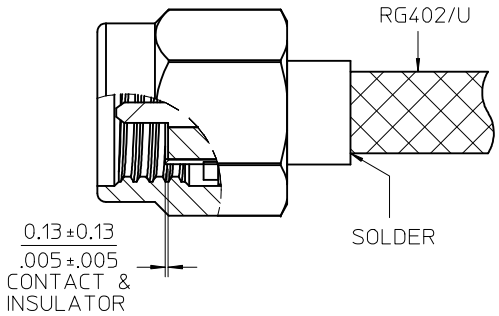

USING CONTACT LOCATOR TOOL 89676-3600, SLIP CONTACT/CABLE INTO SMA ASSEMBLY UNTIL BOTTOMS. SOLDER CABLE TO SMA ASSEMBLY.

USING INSULATOR INSERTION TOOL 89676-3100 PRESS INSULATOR TO DIMENSION SHOWN.

PART NO.	PACKAGING	FINISH BODY	FINISH CONTACT
73251-0034	BY TRAY	8 MICROINCHES	8 MICROINCHES
73251-0033	BY BAG	30 MICROINCHES	30 MICROINCHES
73251-0032	BY TRAY (20 CAV)	10 MICROINCHES	30 MICROINCHES
73251-0031	BY BAG	10 MICROINCHES	30 MICROINCHES

SPECIFICATION	DESCRIPTION
PS-89675-346	ELECTRO/MECH PERFORM.
MIL-STD-348A, FIG. 310.1	INTERFACE

REV	DESCRIPTION
B	CHG: UPDATED VIEWS PER RF15-E096 EC NO: URF2015-0343 2015/01/06 DRWN:RYEH CH'KD: APPR:YCHENG 2015/01/12

QUALITY SYMBOLS
E =0
E =0
E =0

GENERAL TOLERANCES (UNLESS SPECIFIED)

	mm	INCH
4 PLACES	± ---	± ---
3 PLACES	± ---	± ---
2 PLACES	± ---	± ---
1 PLACE	± ---	± ---
0 PLACE	±	±

ANGULAR ± 1 °

DRAFT WHERE APPLICABLE MUST REMAIN WITHIN DIMENSIONS

DIMENSION STYLE: MM/IN
SCALE: 6:1
DESIGN UNITS: METRIC
THIRD ANGLE PROJECTION

		DATE
DRAWN BY	NBJ	1997/12/01
CHECKED BY	DHG	1998/01/05
APPROVED BY	GMH	1998/01/06

TITLE: SMA PLUG, SOLDER TYPE FOR RG402 CABLE, 50 OHMS SMA-PC, EWR-1980

molex

MATERIAL NO.: SEE TABLE
DOCUMENT NO.: SD-73251-003
SHEET NO.: 1 OF 1
SIZE: C

THIS DRAWING CONTAINS INFORMATION THAT IS PROPRIETARY TO MOLEX INCORPORATED AND SHOULD NOT BE USED WITHOUT WRITTEN PERMISSION