MATERIALS AND FINISHES

BODY BRASS
PLATED NICKEL

CENTER CONTACT BERYLLIUM COPPER
PLATED GOLD

INSULATOR TEFLON

OUTER CONTACT BRASS
PLATED NICKEL

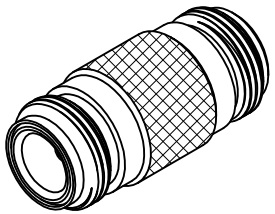

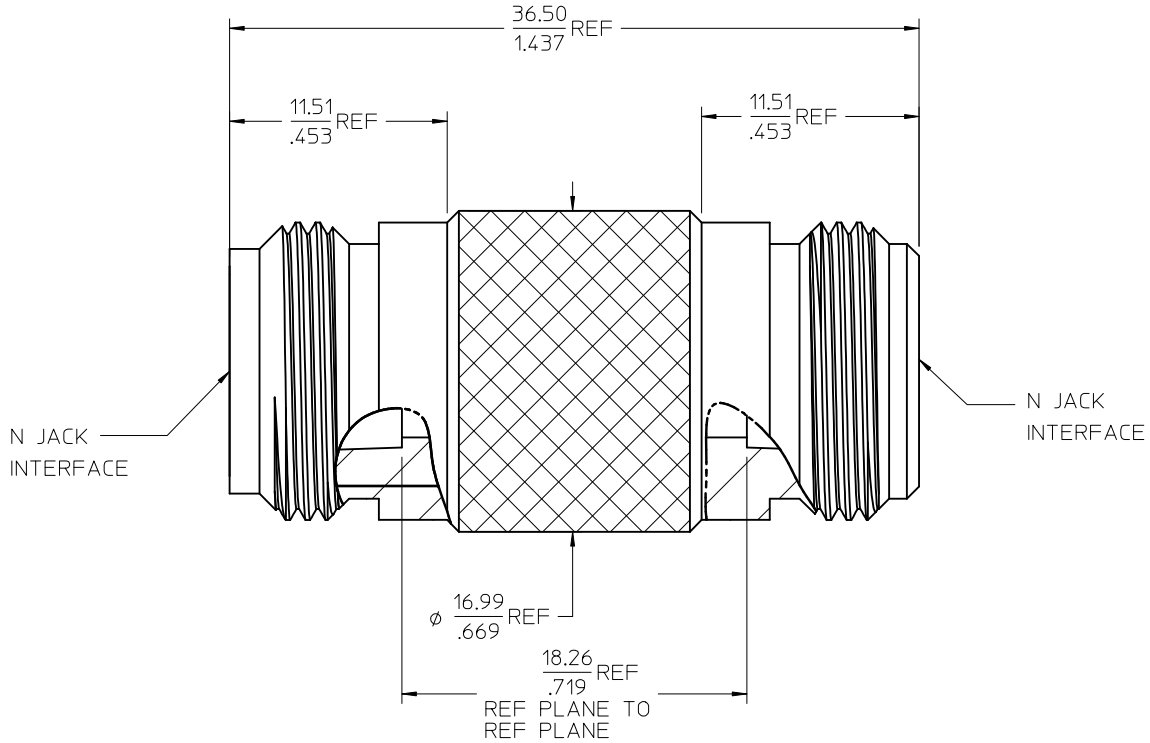

73276-0023	ONE PIECE 73276-0022 PER BAG
73276-0022	BULK
PART NO.	PACKAGING

PS-89675-0940	ELECTRO/MECH PERFORM.
MIL-STD-348A, FIG. 304.2	INTERFACE
SPECIFICATION	DESCRIPTION

REV	DESCRIPTION	
	CHG: CLARIFIED BAGGING.	
	EC NO: URF2010-0369	
	DRWN:AROBERTSON	2009/12/18
	CHKD:SSS	2009/12/18
	APPR: JWIENER	2009/12/18

A4

QUALITY SYMBOLS
▼=0
▽C=0

GENERAL TOLERANCES (UNLESS SPECIFIED)

	mm	INCH
4 PLACES	± ---	± ---
3 PLACES	± ---	± ---
2 PLACES	± ---	± ---
1 PLACE	± ---	± ---
ANGULAR ± 2 °		

DRAFT WHERE APPLICABLE MUST REMAIN WITHIN DIMENSIONS

DIMENSION STYLE: MM/IN
SCALE
DESIGN UNITS: METRIC
THIRD ANGLE PROJECTION

DRAWN BY	JM	DATE 2006/05/31
CHECKED BY	JM	DATE 2006/05/31
APPROVED BY	JDW	DATE 2006/05/31

TITLE: N JACK TO N JACK ADAPTER, 50 OHMS EWR-3117, N-AD/JJ

molex MOLEX INCORPORATED

MATERIAL NO.: SEE TABLE
DOCUMENT NO.: SD-73276-002
SHEET NO.: 1 OF 1
SIZE: C

THIS DRAWING CONTAINS INFORMATION THAT IS PROPRIETARY TO MOLEX INCORPORATED AND SHOULD NOT BE USED WITHOUT WRITTEN PERMISSION