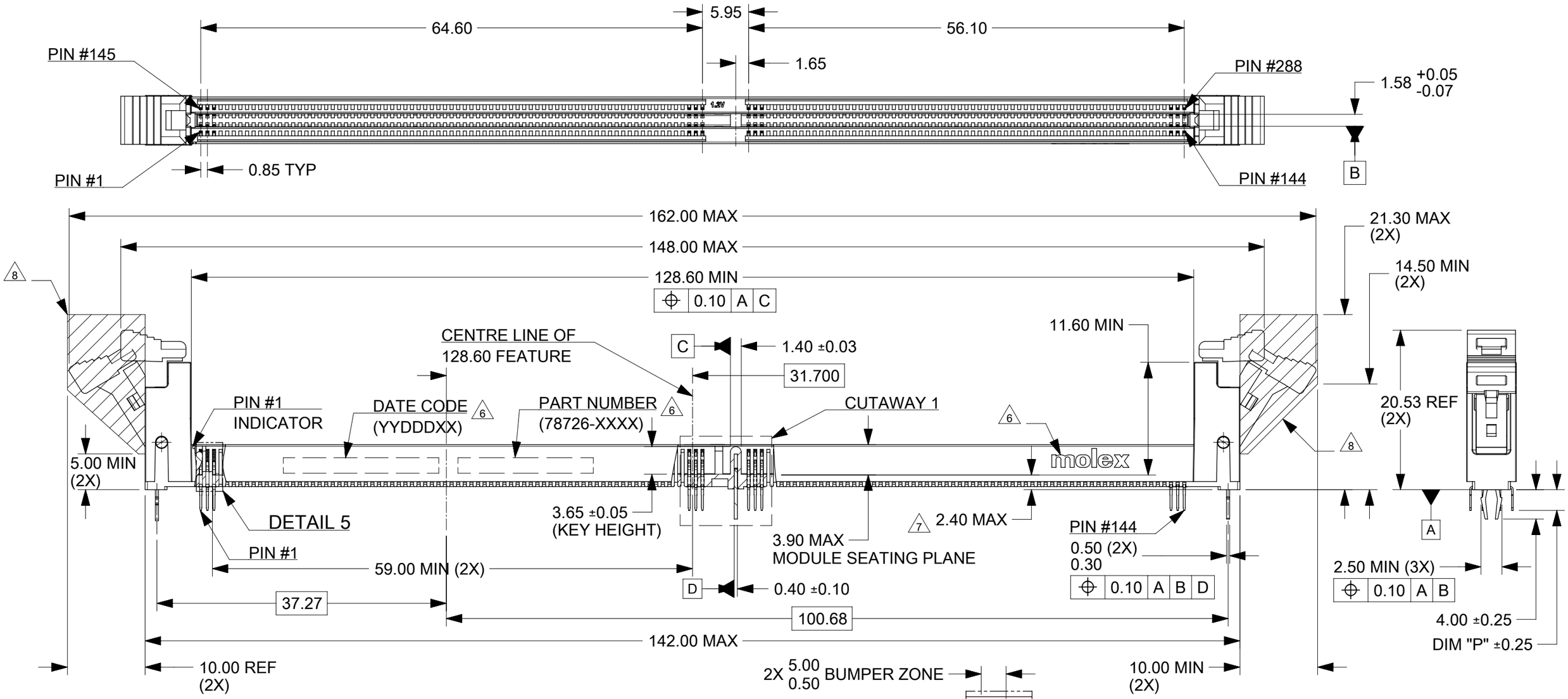

DETAIL 5 : BUMPER ZONE

NOTES:

1. MATERIAL : HOUSING - HALOGEN FREE HIGH TEMP POLYAMIDE, GLASS FILLED, UL94V-0.
   COLOUR : SEE TABLE ON SHEET 5.
   LATCH - HALOGEN FREE HIGH TEMP POLYAMIDE, GLASS FILLED, UL94V-0.
   COLOUR : SEE TABLE ON SHEET 5.
   TERMINAL : COPPER ALLOY.
   FORKLOCK: COPPER ALLOY.
2. FINISHES - SEE TABLE ON SHEET 5.
3. PRODUCT SPECIFICATION : SEE TABLE ON SHEET 5.
4. PACKAGING SPECIFICATION: PRODUCT SHALL BE PACKED IN TRAY, SEE SHEET 5
5. CARD SLOT ACCEPTS 1.40±0.10MM MODULE THICKNESS (MEASURED OVER P.C. PADS).

6. MOLEX LOGO, DATE & PART NO. INDICATED ON HOUSING.
7. MODULE SEATING PLANE.
8. KEEP OUT ZONE RESERVED FOR LATCH.
9. KEEP OUT AREA IS THE AREA WHERE THE CONNECTOR (INCLUDES LATCHES IN OPENING POSITION) IS MOUNTED ON THE PCB.

10. REFER TO AS-78726-001 FOR CONNECTOR APPLICATION GUIDELINE.
11. REFER TO AS-78726-002 FOR PCB ROUTING RECOMMENDATIONS.

THIS DRAWING CONTAINS INFORMATION THAT IS PROPRIETARY TO MOLEX ELECTRONIC TECHNOLOGIES, LLC AND SHOULD NOT BE USED WITHOUT WRITTEN PERMISSION

DIMENSION UNITS	SCALE
mm	NTS

GENERAL TOLERANCES (UNLESS SPECIFIED)

ANGULAR TOL	±	3.0 °
4 PLACES	±	
3 PLACES	±	
2 PLACES	±	0.2
1 PLACE	±	
0 PLACES	±	

DRAFT WHERE APPLICABLE MUST REMAIN WITHIN DIMENSIONS

CURRENT REV DESC: REMOVED OBSOLETED PART NUMBER AS PER PCN#511698.

EC NO: 742551
DRWN: SANTHN 2023/04/20
CHK'D: GGA 2023/05/12
APPR: GGA 2023/05/12

INITIAL REVISION:
DRWN: EFLEE 2012/03/08
APPR: EKSOH 2012/05/09

THIRD ANGLE PROJECTION | DRAWING: A3-SIZE | SERIES: 78726

molex

DDR4 DIMM, 0.85MM PITCH
288CKTS, VERTICAL TH

PRODUCT CUSTOMER DRAWING

DOCUMENT NUMBER	DOC TYPE	DOC PART	REVISION
SD-78726-002	PSD	000	A9

MATERIAL NUMBER	CUSTOMER	SHEET NUMBER
SEE TABLE	GENERAL MARKET	1 OF 6

DOCUMENT STATUS	P1	RELEASE DATE	2023/05/12 06:17:40

FORMAT: master-tb-prod-A3
REVISION: J1
DATE: 2021/05/01

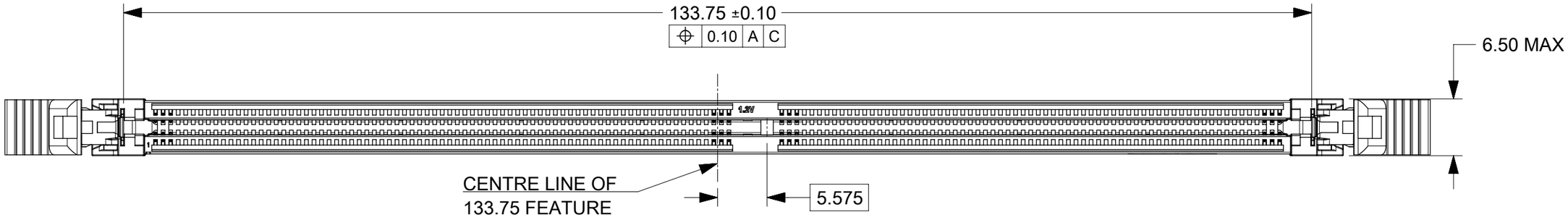

TOP VIEW
LATCH OPENING POSITION

ISO VIEW
LATCH CLOSED POSITION

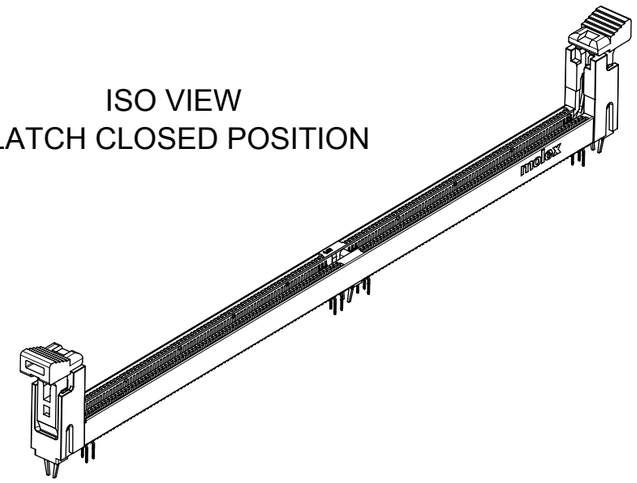

ISO VIEW
LATCH OPENED POSITION

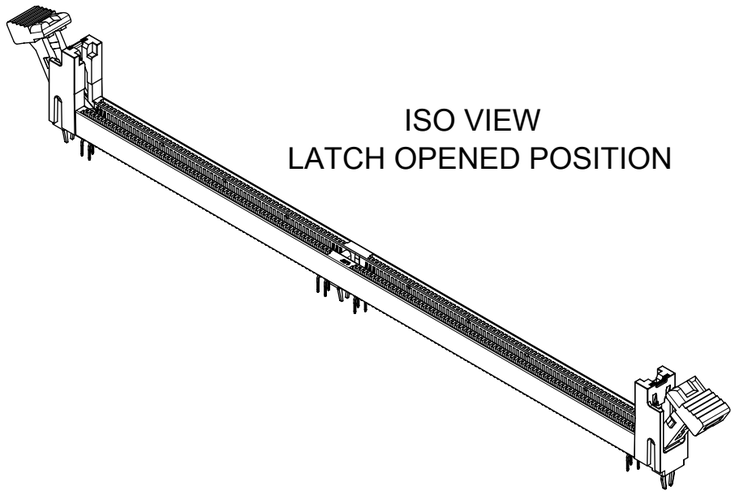

THIS DRAWING CONTAINS INFORMATION THAT IS PROPRIETARY TO MOLEX ELECTRONIC TECHNOLOGIES, LLC AND SHOULD NOT BE USED WITHOUT WRITTEN PERMISSION

DIMENSION UNITS	SCALE
mm	NTS

GENERAL TOLERANCES (UNLESS SPECIFIED)

ANGULAR TOL	±	3.0 °
4 PLACES	±	
3 PLACES	±	
2 PLACES	±	0.2
1 PLACE	±	
0 PLACES	±	

DRAFT WHERE APPLICABLE MUST REMAIN WITHIN DIMENSIONS

CURRENT REV DESC: REMOVED OBSOLETED PART NUMBER AS PER PCN#511698.

EC NO: 742551
DRWN: SANTHN 2023/04/20
CHK'D: GGA 2023/05/12
APPR: GGA 2023/05/12

INITIAL REVISION:
DRWN: EFLEE 2012/03/08
APPR: EKSOH 2012/05/09

THIRD ANGLE PROJECTION | DRAWING: A3-SIZE | SERIES: 78726

molex

DDR4 DIMM, 0.85MM PITCH
288CKTS, VERTICAL TH

PRODUCT CUSTOMER DRAWING

DOCUMENT NUMBER	DOC TYPE	DOC PART	REVISION
SD-78726-002	PSD	000	A9

MATERIAL NUMBER	CUSTOMER	SHEET NUMBER
SEE TABLE	GENERAL MARKET	2 OF 6

DOCUMENT STATUS	P1	RELEASE DATE	2023/05/12 06:17:40

FORMAT: master-tb-prod-A3
REVISION: J1
DATE: 2021/05/01

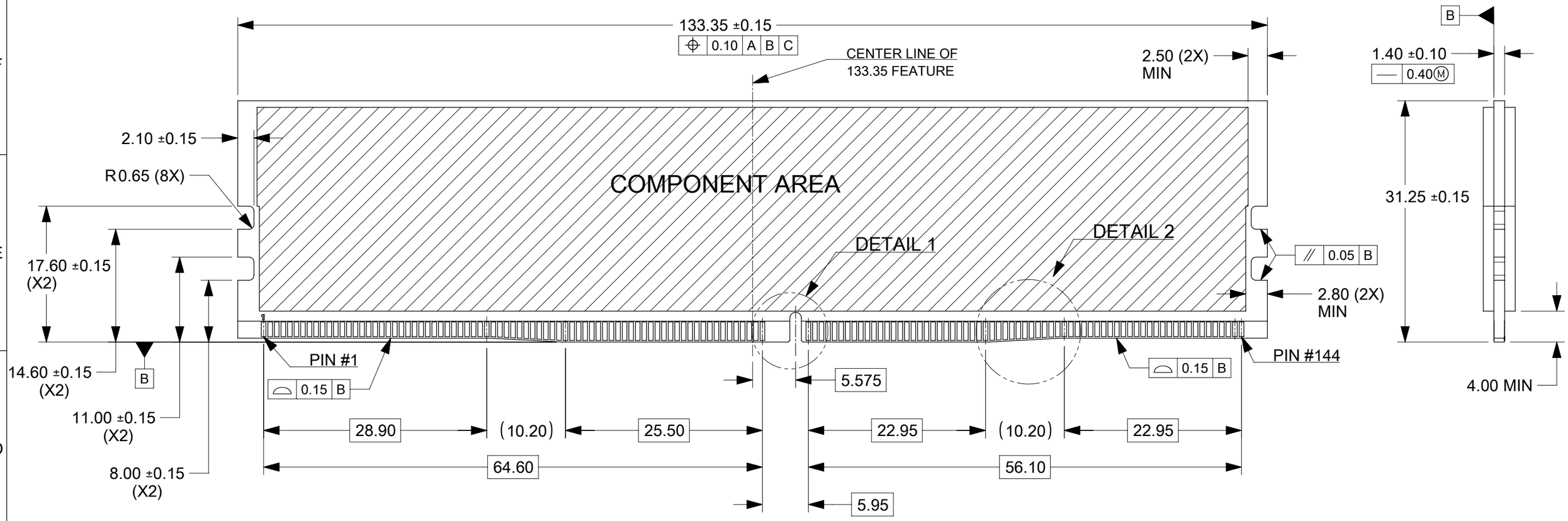

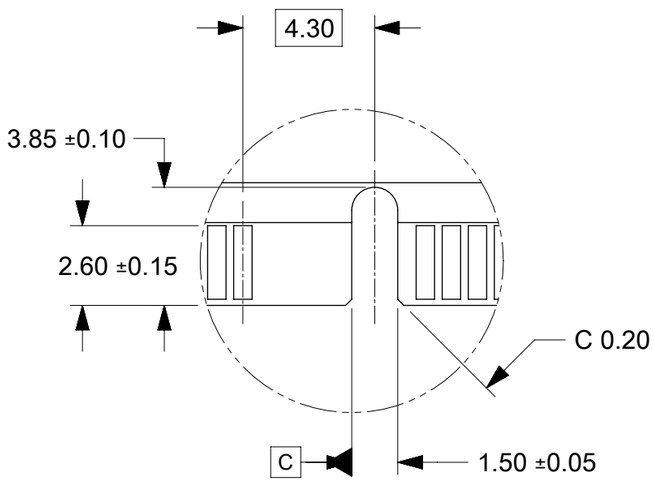

DETAIL 1

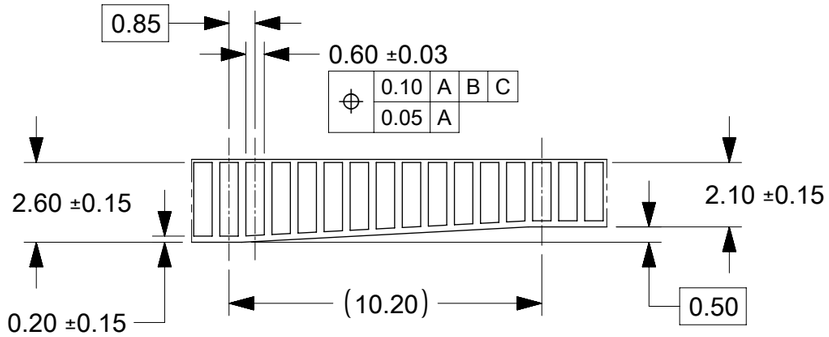

DETAIL 2

THIS DRAWING CONTAINS INFORMATION THAT IS PROPRIETARY TO MOLEX ELECTRONIC TECHNOLOGIES, LLC AND SHOULD NOT BE USED WITHOUT WRITTEN PERMISSION

DIMENSION UNITS	SCALE
mm	NTS

GENERAL TOLERANCES (UNLESS SPECIFIED)

ANGULAR TOL	± 3.0 °
4 PLACES	±
3 PLACES	±
2 PLACES	± 0.2
1 PLACE	±
0 PLACES	±

DRAFT WHERE APPLICABLE MUST REMAIN WITHIN DIMENSIONS

CURRENT REV DESC: REMOVED OBSOLETED PART NUMBER AS PER PCN#511698.

EC NO: 742551
DRWN: SANTHN 2023/04/20
CHK'D: GGA 2023/05/12
APPR: GGA 2023/05/12

INITIAL REVISION:
DRWN: EFLEE 2012/03/08
APPR: EKSOH 2012/05/09

THIRD ANGLE PROJECTION | DRAWING: A3-SIZE | SERIES: 78726

molex

DDR4 DIMM, 0.85MM PITCH
288CKTS, VERTICAL TH

PRODUCT CUSTOMER DRAWING

DOCUMENT NUMBER	DOC TYPE	DOC PART	REVISION
SD-78726-002	PSD	000	A9

MATERIAL NUMBER	CUSTOMER	SHEET NUMBER
SEE TABLE	GENERAL MARKET	3 OF 6

DOCUMENT STATUS	P1	RELEASE DATE	2023/05/12 06:17:40

FORMAT: master-tb-prod-A3
REVISION: J1
DATE: 2021/05/01

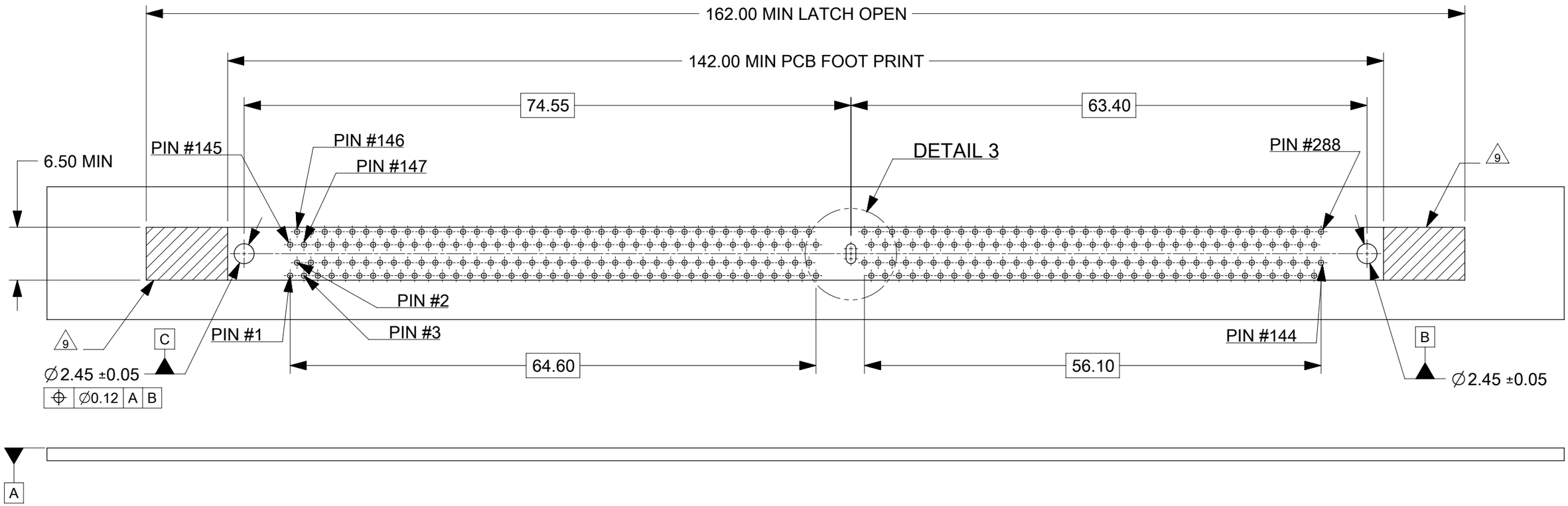

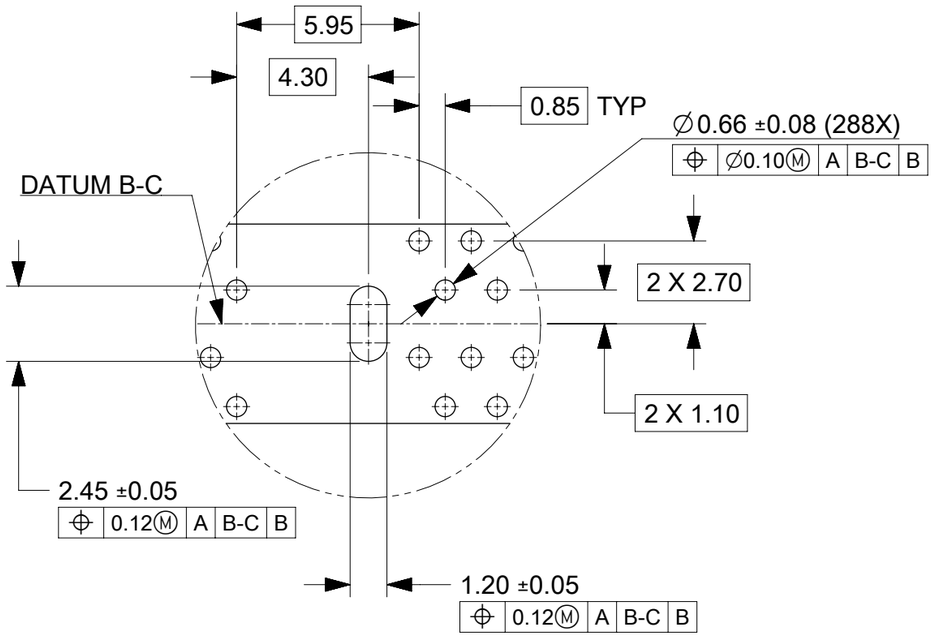

DETAIL 3

THIS DRAWING CONTAINS INFORMATION THAT IS PROPRIETARY TO MOLEX ELECTRONIC TECHNOLOGIES, LLC AND SHOULD NOT BE USED WITHOUT WRITTEN PERMISSION

DIMENSION UNITS	SCALE
mm	NTS

GENERAL TOLERANCES (UNLESS SPECIFIED)

ANGULAR TOL	±	3.0 °
4 PLACES	±	
3 PLACES	±	
2 PLACES	±	0.2
1 PLACE	±	
0 PLACES	±	

DRAFT WHERE APPLICABLE MUST REMAIN WITHIN DIMENSIONS

CURRENT REV DESC: REMOVED OBSOLETED PART NUMBER AS PER PCN#511698.

EC NO: 742551
DRWN: SANTHN 2023/04/20
CHK'D: GGA 2023/05/12
APPR: GGA 2023/05/12

INITIAL REVISION:
DRWN: EFLEE 2012/03/08
APPR: EKSOH 2012/05/09

THIRD ANGLE PROJECTION | DRAWING: A3-SIZE | SERIES: 78726

molex

DDR4 DIMM, 0.85MM PITCH
288CKTS, VERTICAL TH

PRODUCT CUSTOMER DRAWING

DOCUMENT NUMBER	DOC TYPE	DOC PART	REVISION
SD-78726-002	PSD	000	A9

MATERIAL NUMBER	CUSTOMER	SHEET NUMBER
SEE TABLE	GENERAL MARKET	4 OF 6

DOCUMENT STATUS	P1	RELEASE DATE	2023/05/12 06:17:40

FORMAT: master-tb-prod-A3
REVISION: J1
DATE: 2021/05/01

CKT SIZE	ASSEMBLY PART NO.	HOUSING COLOR	LATCH COLOR	DIM "P"	RECOMMENDED PCB THICKNESS	PLATING OPTION		PRODUCT SPEC. NO.	PACKAGING SPEC. NO.
						TERMINAL	FORKLOCK		
288	78726-1051	BLACK	BLACK	2.10	1.57	0.76 MICROMETER (30 MICROINCH) MIN GOLD ON CONTACT 2.54 MICROMETER (100 MICROINCH) MIN TIN ON SOLDERTAILS 1.27 MICROMETER (50 MICROINCH) MIN NICKEL UNDERPLATE	1 MICROMETER (40 MICROINCH) MIN TIN OVERALL (PRE-PLATED)	PS-78726-001	PK-78726-001
	78726-1039			2.40	1.57				
	78726-1002			2.67	1.57				
	78726-1003			3.18	2.36				
	78726-1026			3.50	3.00				
	78726-1040	BLACK	WHITE	2.40	1.57				
	78726-1004			2.67	1.57				
	78726-1005			3.18	2.36				
	78726-1041	WHITE	BLACK	2.40	1.57				
	78726-1054	WHITE	WHITE	2.10	1.57				
	78726-1042			2.40	1.57				
	78726-1029			3.50	3.00				
	78726-1055	BLUE	BLUE	2.10	1.57				
	78726-1043			2.40	1.57				
	78726-1010			2.67	1.57				
	78726-1011			3.18	2.36				
	78726-1030			3.50	3.00				
	78726-1023	BLUE	WHITE	3.18	2.36				
	78726-1064	YELLOW	WHITE	2.40	1.57				
	78726-0081	BLACK	BLACK	3.18	2.36				787260003
	78726-3005		WHITE	3.18	2.36				
	78726-3052			2.10	1.57				
	78726-4039		BLACK	2.40	1.57				2042450002
	78726-4040		WHITE	2.40	1.57				

THIS DRAWING CONTAINS INFORMATION THAT IS PROPRIETARY TO MOLEX ELECTRONIC TECHNOLOGIES, LLC AND SHOULD NOT BE USED WITHOUT WRITTEN PERMISSION

DIMENSION UNITS	SCALE
mm	NTS

GENERAL TOLERANCES (UNLESS SPECIFIED)

ANGULAR TOL	±	3.0 °
4 PLACES	±	
3 PLACES	±	
2 PLACES	±	0.2
1 PLACE	±	
0 PLACES	±	

DRAFT WHERE APPLICABLE MUST REMAIN WITHIN DIMENSIONS

CURRENT REV DESC: REMOVED OBSOLETED PART NUMBER AS PER PCN#511698.

EC NO: 742551
DRWN: SANTHN 2023/04/20
CHK'D: GGA 2023/05/12
APPR: GGA 2023/05/12

INITIAL REVISION:
DRWN: EFLEE 2012/03/08
APPR: EKSOH 2012/05/09

THIRD ANGLE PROJECTION | DRAWING: A3-SIZE | SERIES: 78726

molex

DDR4 DIMM, 0.85MM PITCH
288CKTS, VERTICAL TH

PRODUCT CUSTOMER DRAWING

DOCUMENT NUMBER	DOC TYPE	DOC PART	REVISION
SD-78726-002	PSD	000	A9

MATERIAL NUMBER	CUSTOMER	SHEET NUMBER
SEE TABLE	GENERAL MARKET	5 OF 6

DOCUMENT STATUS	P1	RELEASE DATE	2023/05/12 06:17:40

FORMAT: master-tb-prod-A3
REVISION: J1
DATE: 2021/05/01

CKT SIZE	ASSEMBLY PART NO.	HOUSING COLOR	LATCH COLOR	DIM "P"	RECOMMENDED PCB THICKNESS	PLATING OPTION		PRODUCT SPEC. NO.	PACKAGING SPEC. NO.
						TERMINAL	FORKLOCK		
288	78726-1045	BLACK	BLACK	2.40	1.57	0.38 MICROMETER (15 MICROINCH) MIN GOLD ON CONTACT 2.54 MICROMETER (100 MICROINCH) MIN TIN ON SOLDERTAILS 1.27 MICROMETER (50 MICROINCH) MIN NICKEL UNDERPLATE	1 MICROMETER (40 MICROINCH) MIN TIN OVERALL (PRE-PLATED)	PS-78726-002	PK-78726-001
	78726-1012			2.67	1.57				
	78726-1013			3.18	2.36				
	78726-1032			3.50	3.00				
	78726-1046	BLACK	WHITE	2.40	1.57				
	78726-1033			3.50	3.00				
	78726-1059	WHITE	BLACK	2.10	1.57				
	78726-1047			2.40	1.57				
	78726-1048	WHITE	WHITE	2.40	1.57				
	78726-1018			2.67	1.57				
	78726-1035			3.50	3.00				
	78726-1049	BLUE	BLUE	2.40	1.57				
	78726-1020			2.67	1.57				
	78726-1021			3.18	2.36				
	78726-1036			3.50	3.00				
	78726-1050	BLUE	WHITE	2.40	1.57				
	78726-1037			3.50	3.00				
	78726-1072	YELLOW	WHITE	3.50	3.00				
	78726-3012	BLACK	BLACK	2.67	1.57				787260003
	78726-3032			3.50	3.00				
	78726-3020	BLUE	BLUE	2.67	1.57				
	78726-3036			3.50	3.00				

THIS DRAWING CONTAINS INFORMATION THAT IS PROPRIETARY TO MOLEX ELECTRONIC TECHNOLOGIES, LLC AND SHOULD NOT BE USED WITHOUT WRITTEN PERMISSION

DIMENSION UNITS	SCALE
mm	NTS

GENERAL TOLERANCES (UNLESS SPECIFIED)

ANGULAR TOL	±	3.0 °
4 PLACES	±	
3 PLACES	±	
2 PLACES	±	0.2
1 PLACE	±	
0 PLACES	±	

DRAFT WHERE APPLICABLE MUST REMAIN WITHIN DIMENSIONS

CURRENT REV DESC: REMOVED OBSOLETED PART NUMBER AS PER PCN#511698.

EC NO: 742551
DRWN: SANTHN 2023/04/20
CHK'D: GGA 2023/05/12
APPR: GGA 2023/05/12

INITIAL REVISION:
DRWN: EFLEE 2012/03/08
APPR: EKSOH 2012/05/09

molex

DDR4 DIMM, 0.85MM PITCH
288CKTS, VERTICAL TH

PRODUCT CUSTOMER DRAWING

DOCUMENT NUMBER	DOC TYPE	DOC PART	REVISION
SD-78726-002	PSD	000	A9

THIRD ANGLE PROJECTION	DRAWING	SERIES	MATERIAL NUMBER	CUSTOMER	SHEET NUMBER
	A3-SIZE	78726	SEE TABLE	GENERAL MARKET	6 OF 6

DOCUMENT STATUS	P1	RELEASE DATE	2023/05/12 06:17:40

FORMAT: master-tb-prod-A3
REVISION: J1
DATE: 2021/05/01