VIEWS FROM THE FRONT SIDE
FEMALE

8 POLE

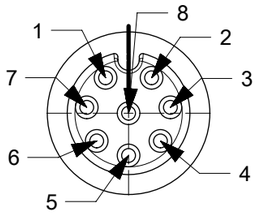

Pin	Wire color
1	WH
2	BN
3	GN
4	YE
5	GY
6	PK
7	BU
8	RD

5 POLE

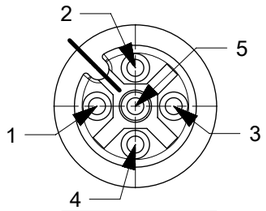

Pin	Wire color
1	BN
2	WH
3	BU
4	BK
5	GY OR GN/YE

4 POLE

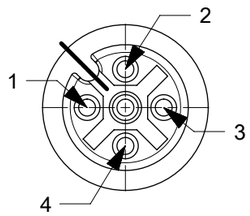

Pin	Wire color
1	BN
2	WH
3	BU
4	BK

3 POLE

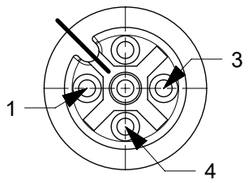

Pin	Wire color
1	BN
3	BU
4	BK

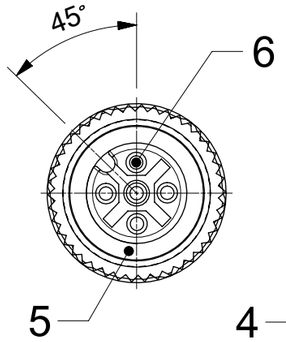

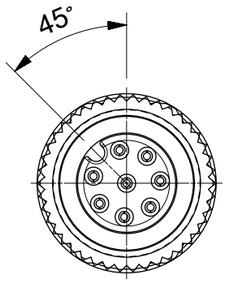

VIEWS FROM THE FRONT SIDE

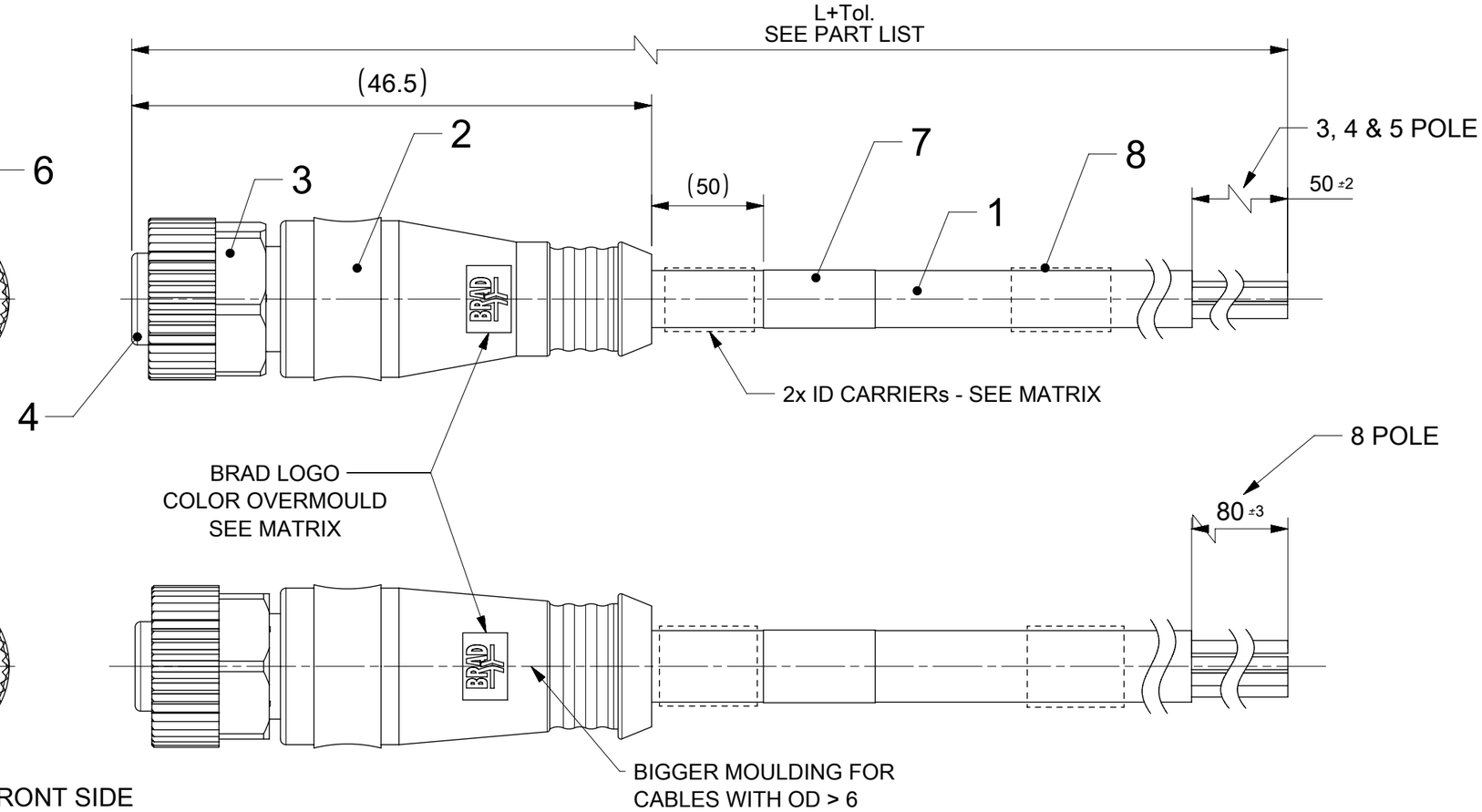

BILL OF MATERIAL

ITEM	QTY.	DESCRIPTION	MATERIAL	FINISH/COLOR
8	0/2	I/D CARRIER	-	-
7	1	LABEL	VINYL	YELLOW
6	3/4/5/8	CONTACTS	BRASS	GOLD OVER Ni-PLATED
5	1	GASKET	FPM	RED
4	1	FEMALE INSERT	PUR	BLACK
3	1	COUPLING NUT	BRASS	Ni-PLATED
2	-	OVERMOULD	TPU	BLACK
1	-	CABLE	SEE CABLE LIST	SEE CABLE LIST

NOTES:

TEMPERATURE RANGE : SEE CABLE LIST
RATED VOLTAGE: 3, 4 contacts : 250V
5 contacts : 60V
8 contacts : 30V
RATED CURRENT: 3, 4, 5 contacts : 4A
8 contacts : 2A

INSULATION RESISTANCE: 10^8 Ω MIN.
MATING CYCLES: MIN. 100
ENVIRONMENTAL:PROTECTION: IP67 IN MATED AND LOCKED POSITION

THIS DRAWING CONTAINS INFORMATION THAT IS PROPRIETARY TO MOLEX ELECTRONIC TECHNOLOGIES, LLC AND SHOULD NOT BE USED WITHOUT WRITTEN PERMISSION

FUNCTIONAL SYMBOLS: F/A = 0, F/C = 0, F/P = 0
DIVISIONAL SYMBOLS

DIMENSION UNITS	SCALE
mm	2:1

GENERAL TOLERANCES (UNLESS SPECIFIED)

ANGULAR TOL	±	1.0 °
4 PLACES	±	
3 PLACES	±	
2 PLACES	±	0.05
1 PLACE	±	0.3
0 PLACES	±	0.5

DRAFT WHERE APPLICABLE MUST REMAIN WITHIN DIMENSIONS

CURRENT REV DESC: CABLE LIST INFORMATIONS ADDITED

EC NO: 788824
DRWN: RSCHIEBER 2024/06/07
CHK'D: RSILLER 2024/06/11
APPR: RSILLER 2024/06/11

INITIAL REVISION:
DRWN: SSM 2021/12/16
APPR: RSILLER 2022/02/28

THIRD ANGLE PROJECTION | DRAWING: A3-SIZE | SERIES: 120065

molex

CSE M12 XP AC FE STR WSOR XM SE UNSH BK

PRODUCT CUSTOMER DRAWING

DOCUMENT NUMBER	DOC TYPE	DOC PART	REVISION
1200652251	PSD	000	B1

MATERIAL NUMBER	CUSTOMER	SHEET NUMBER
SEE PART LIST	GENERAL MARKET	1 OF 3

DOCUMENT STATUS	P1	RELEASE DATE	2024/06/11 05:15:45

FORMAT: master-tb-prod-A3
REVISION: J1
DATE: 2021/05/01

PART NO MATRIX

8	0	X	0	0	0	B	X	X	X	X	X	X	X	X
													OPTIONS	

80 = M12x1
SINGLE ENDED

POLES:
3 = 3 POLES
4 = 4 POLES
5 = 5 POLES
8 = 8 POLES

HEADER:
000 = FEMALE STRAIGHT

CABLE:
B30 = 0,34mm², TPU BLACK
B33 = 0,34mm², TPU GREY
B36 = 0,34mm², TPU ORANGE
B39 = 0,75mm², TPU BLACK
B41 = 0,25mm², TPU BLACK
B42 = 0,34mm², TPU BLACK
B49 = 0,25mm², TPU ORANGE
B55 = 0,34mm², TPU YELLOW

UNIT:
M = METER
C = CENTIMETER
T = 10 x METER

LENGTH:
EXAMPLE:
010 = 1 m
050 = 5 m
100 = 10 m

OVERMOLD COLOR:
BLANK (STANDARD) = BK
A = GY, G = BK, Y = YE, R = RD
COUPLING NUT:
BLANK (STANDARD)
= KNURLED/HEX BRASS, Ni PLATED
5 = KNURLED DERLIN
7 = KNURLED BRASS Ni PLATED,
TEFLON COATED
H = 2x ID CARRIERs
ALWAYS FOR CABLES B36)

CABLE LIST

CABLE TYPE	NO. OF WIRES	CROSS SECTION	CABLE JACKET	UL 21215	CSA	ISO6722	ISO14572	STATIC: TEMP. / BENDING RADIUS	DYNAMIC: TEMP. / BENDING RADIUS	DRAG CHAIN	OTHER
B30	3 / 4 / 5	0.34mm²	TPU Black	YES	YES	YES	YES	-40°C to +90°C 5xO.D.	-25°C to +80°C 7.5xO.D.	up to 5 000 000 cycles at temp 20°C	WELD SLAG RESISTANCE
B41	8	0.25mm²	TPU Black								
B42	5	0.34mm²	TPU Black								
B33	4 / 5	0.34mm²	TPU Gray								
B55	4 / 5	0.34mm²	TPU Yellow								
B36	4 / 5	0.34mm²	TPU Orange								
B39	5	0.34mm²	TPU Yellow								

CABLE LENGTH TOLERANCES

LENGTH	TOLERANCE
0 m - 1 m	+40 mm
>1 m - 5 m	+60 mm
>5 m - 10 m	+80 mm
>10 m - 20 m	+140 mm
>20 m - 30 m	+160 mm
>30 m	+1% length

THIS DRAWING CONTAINS INFORMATION THAT IS PROPRIETARY TO MOLEX ELECTRONIC TECHNOLOGIES, LLC AND SHOULD NOT BE USED WITHOUT WRITTEN PERMISSION

FUNCTIONAL SYMBOLS: A = 0, C = 0, D = 0
DIVISIONAL SYMBOLS

DIMENSION UNITS	SCALE
mm	1:1

GENERAL TOLERANCES (UNLESS SPECIFIED)

ANGULAR TOL	±	1.0 °
4 PLACES	±	
3 PLACES	±	
2 PLACES	±	0.05
1 PLACE	±	0.3
0 PLACES	±	0.5

DRAFT WHERE APPLICABLE MUST REMAIN WITHIN DIMENSIONS

CURRENT REV DESC: CABLE LIST INFORMATIONS ADDITED

EC NO: 788824
DRWN: RSCHIEBER 2024/06/07
CHK'D: RSILLER 2024/06/11
APPR: RSILLER 2024/06/11

INITIAL REVISION:
DRWN: SSM 2021/12/16
APPR: RSILLER 2022/02/28

THIRD ANGLE PROJECTION | DRAWING: A3-SIZE | SERIES: 120065

molex

CSE M12 XP AC FE STR WSOR XM SE UNSH BK

PRODUCT CUSTOMER DRAWING

DOCUMENT NUMBER	DOC TYPE	DOC PART	REVISION
1200652251	PSD	000	B1

MATERIAL NUMBER	CUSTOMER	SHEET NUMBER
SEE PART LIST	GENERAL MARKET	2 OF 3

DOCUMENT STATUS	P1	RELEASE DATE	2024/06/11 05:15:45

FORMAT: master-tb-prod-A3
REVISION: J1
DATE: 2021/05/01

PART LIST

MOLEX PN	ENGINEERING No	L [mm]
3P CABLE B30		
1200652247	803000B30M010	1000
1200652248	803000B30M020	2000
1200652249	803000B30M050	5000
1200652250	803000B30M100	10000
1200659784	803000B30M200	20000
4P CABLE B30		
1200652251	804000B30M010	1000
1200652388	804000B30M010R	1000
1200652252	804000B30M020	2000
1200659466	804000B30M030	3000
1200659639	804000B30M030R	3000
1200652253	804000B30M050	5000
1200659805	804000B30M075	7500
1200659788	804000B30M085	8500
1200659806	804000B30M098	9800
1200652254	804000B30M100	10000
1200659400	804000B30M150	15000
1200659467	804000B30M200	20000
1200659468	804000B30M250	25000
1200659469	804000B30M300	30000
5P CABLE B30		
1200659963	805000B30M006	600
1200659518	805000B30M010	1000
1200659519	805000B30M020	2000
1200659984	805000B30M0207	2000
1200656650	805000B30M030	3000
1200659520	805000B30M050	5000
1200659521	805000B30M100	10000
1200656214	805000B30M150	15000
1200656483	805000B30M200	20000

MOLEX PN	ENGINEERING No	L [mm]
4P CABLE B33		
1200659966	804000B33M005	500
1200656515	804000B33M005A	500
1200659967	804000B33M010	1000
1200656516	804000B33M010A	1000
1200659456	804000B33M020	2000
1200656517	804000B33M020A	2000
1200659968	804000B33M030	3000
1200656518	804000B33M030A	3000
1200659969	804000B33M040	4000
1200659970	804000B33M050	5000
1200656519	804000B33M050A	5000
1200659461	804000B33M100	10000
1200656520	804000B33M100A	10000
1200656605	804000B33M150A	15000
1200656606	804000B33M200A	20000
1200657125	804000B33M300A	30000
1200657126	804000B33M400A	40000
1200657127	804000B33M500A	50000
1200657128	804000B33M700A	70000
5P CABLE B33		
1200657176	805000B33M005A	500
1200656643	805000B33M010A	1000
1200659457	805000B33M020	2000
1200656644	805000B33M020A	2000
1200656645	805000B33M030A	3000
1200656646	805000B33M050A	5000
1200659462	805000B33M100	10000
1200656647	805000B33M100A	10000
1200656648	805000B33M150A	15000
1200656649	805000B33M200A	20000
1200657177	805000B33M300A	30000
1200657178	805000B33M400A	40000
1200657179	805000B33M500A	50000

MOLEX PN	ENGINEERING No	L [mm]
4P CABLE B36		
1200656851	804000B36M0107Y	1000
1200656388	804000B36M0207H	2000
1200659429	804000B36M0207Y	2000
1200656389	804000B36M0507H	5000
1200659430	804000B36M0507Y	5000
1200656390	804000B36M1007H	10000
1200659431	804000B36M1007Y	10000
1200656550	804000B36M1507Y	15000
1200656551	804000B36M2007Y	20000
5P CABLE B36		
1200656835	805000B36M1007Y	10000
5P CABLE B39		
1200656042	805000B39M050	5000
5P CABLE B42		
1200656062	805000B42M005	500
1200652255	805000B42M010	1000
1200652256	805000B42M020	2000
1200652257	805000B42M050	5000
1200652258	805000B42M100	10000
1200659543	805000B42M200	20000
1200659544	805000B42M300	30000
8P CABLE B41		
1200652306	808000B41M010	1000
1200652393	808000B41M010R	1000
1200659458	808000B41M020	2000
1200659777	808000B41M030	3000
1200652308	808000B41M050	5000
1200659463	808000B41M100	10000
1200656044	808000B41M150	15000
1200659734	808000B41M200	20000
1200656485	808000B41M250	25000

MOLEX PN	ENGINEERING No	L [mm]
4P CABLE B55		
1200656620	804000B55M010Y	1000
1200656621	804000B55M020Y	2000
1200656622	804000B55M030Y	3000
1200656623	804000B55M050Y	5000
1200656624	804000B55M100Y	10000
1200656625	804000B55M150Y	15000
1200656626	804000B55M200Y	20000
5P CABLE B55		
1200656651	805000B55M010Y	1000
1200656652	805000B55M020Y	2000
1200656653	805000B55M030Y	3000
1200656654	805000B55M050Y	5000
1200656655	805000B55M100Y	10000
1200656656	805000B55M150Y	15000
1200656657	805000B55M200Y	20000

THIS DRAWING CONTAINS INFORMATION THAT IS PROPRIETARY TO MOLEX ELECTRONIC TECHNOLOGIES, LLC AND SHOULD NOT BE USED WITHOUT WRITTEN PERMISSION

FUNCTIONAL SYMBOLS: FA = 0, FC = 0, FP = 0

DIVISIONAL SYMBOLS

DIMENSION UNITS: mm
SCALE: 1:1

GENERAL TOLERANCES (UNLESS SPECIFIED)

ANGULAR TOL	±	1.0 °
4 PLACES	±	
3 PLACES	±	
2 PLACES	±	0.05
1 PLACE	±	0.3
0 PLACES	±	0.5

DRAFT WHERE APPLICABLE MUST REMAIN WITHIN DIMENSIONS

CURRENT REV DESC: CABLE LIST INFORMATIONS ADDITED

EC NO: 788824
DRWN: RSCHIEBER 2024/06/07
CHK'D: RSILLER 2024/06/11
APPR: RSILLER 2024/06/11

INITIAL REVISION:
DRWN: SSM 2021/12/16
APPR: RSILLER 2022/02/28

THIRD ANGLE PROJECTION

DRAWING: A3-SIZE
SERIES: 120065

molex

CSE M12 XP AC FE STR WSOR XM SE UNSH BK

PRODUCT CUSTOMER DRAWING

DOCUMENT NUMBER	DOC TYPE	DOC PART	REVISION
1200652251	PSD	000	B1

MATERIAL NUMBER:
CUSTOMER: GENERAL MARKET
SHEET NUMBER: 3 OF 3

DOCUMENT STATUS	P1	RELEASE DATE	2024/06/11 05:15:45

FORMAT: master-tb-prod-A3
REVISION: J1
DATE: 2021/05/01

NOTES:
RATED VOLTAGE:
3, 4 contacts 250V
5 contacts 60V
8 contacts 30V
RATED CURRENT:
3, 4, 5 contacts 4A
8 contacts 2A
PROTECTION CLASS: IP 67

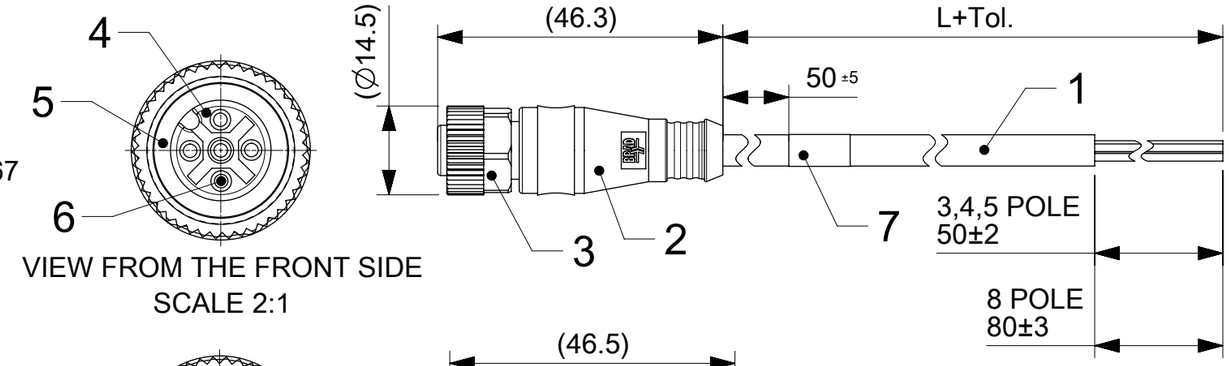

VIEW FROM THE FRONT SIDE
SCALE 2:1

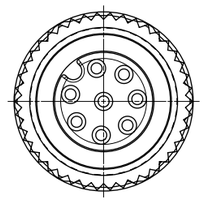

VIEW FROM THE FRONT SIDE
SCALE 2:1

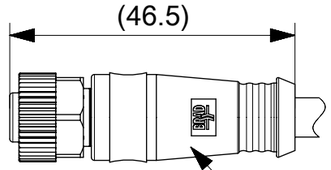

Thicker Overmould for Cables with bigger Outer Diameter

CONTACTS POSITION FRONT VIEW:

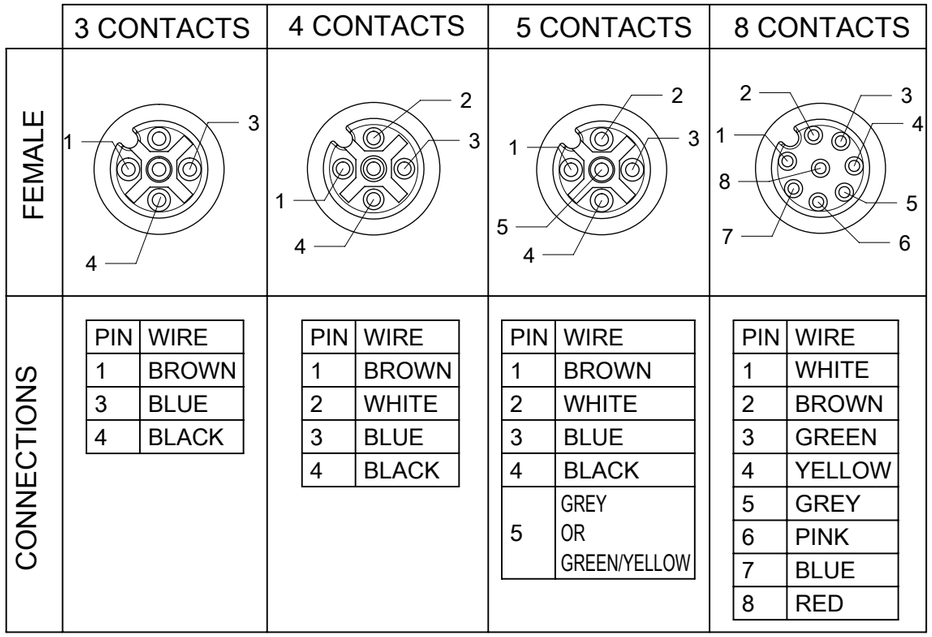

PIN	WIRE
1	BROWN
3	BLUE
4	BLACK

PIN	WIRE
1	BROWN
2	WHITE
3	BLUE
4	BLACK

PIN	WIRE
1	BROWN
2	WHITE
3	BLUE
4	BLACK
5	GREY OR GREEN/YELLOW

PIN	WIRE
1	WHITE
2	BROWN
3	GREEN
4	YELLOW
5	GREY
6	PINK
7	BLUE
8	RED

FOR OPTION SEE - NUMERICAL CODE - ON SHEET 2

ITEM	QTY.	DESCRIPTION	MATERIAL	FINISH
7	1	LABEL YE	VINYL	-
6	3/4/5/8	CONTACT FE	BRASS	GOLD OVER Ni-PLATED
5	1	GASKET RD	FPM	-
4	1	INSERT M12 FE XP BK	PUR	-
3	1	COUPLING NUT M12 FE	SEE SHEET 2	SEE SHEET 2
2	-	OVERMOULDING	SEE SHEET 2	SEE SHEET 2
1	-	CABLE	SEE SHEET 2	-

THIS DRAWING CONTAINS INFORMATION THAT IS PROPRIETARY TO MOLEX ELECTRONIC TECHNOLOGIES, LLC AND SHOULD NOT BE USED WITHOUT WRITTEN PERMISSION

FUNCTIONAL SYMBOLS
FA = 0
FC = 0
FP = 0
DIVISIONAL SYMBOLS

DIMENSION UNITS: mm
SCALE: 1:1
GENERAL TOLERANCES (UNLESS SPECIFIED)
ANGULAR TOL ± °
4 PLACES ±
3 PLACES ±
2 PLACES ±
1 PLACE ±
0 PLACES ±
DRAFT WHERE APPLICABLE MUST REMAIN WITHIN DIMENSIONS

CURRENT REV DESC: STANDARDIZATION
EC NO: 681756
DRWN: MKOWALCZYK01 2021/10/18
CHK'D: ALEKSP3 2021/10/18
APPR: KMARCINIAK01 2021/10/18
INITIAL REVISION:
DRWN: AKONDRACIUK 2016/11/26
APPR: MIWASIECZKO 2016/12/06

molex

CSE M12 XP AC FE STR WSOR XM SE UNSH

PRODUCT CUSTOMER DRAWING

DOCUMENT NUMBER	DOC TYPE	DOC PART	REVISION
1200652251	PSD	00P	B2

THIRD ANGLE PROJECTION	DRAWING	SERIES	MATERIAL NUMBER	CUSTOMER	SHEET NUMBER
	A3-SIZE	120065	SEE PART LIST		1 OF 2

DOCUMENT STATUS	P1	RELEASE DATE	2021/10/18 12:08:57

FORMAT: master-tb-prod-A3
REVISION: J1
DATE: 2021/05/01

ENGINEERING NO - NUMERICAL CODE (Available parts see PART LIST table. Other parts available upon request).

8	0	X	0	0	0	B	X	X	M	X	X	X	X
													OPTIONS

88 = M12x1
SINGLE ENDED

POLES:
3 = 3 POLES
4 = 4 POLES
5 = 5 POLES
8 = 8 POLES

HEADER:
000 = PLUG FEMALE STRARIGHT

CABLE TYPE:
SEE TABLE

UNIT:
M = METER

LENGTH:
EXAMPLE:
010 = 1 m
050 = 5 m
100 = 10 m

Overmold color:
Blank (Standard)=Black
A=Grey / G=Black / Y=Yellow / R=Red

Coupling Nut:
Blank (Standard)=Knurled/Hex Brass, Ni Plated
5=Knurled Derlin
7=Knurled Brass Ni Plated, Teflon Coated

H= 2 pcs. of I/D Carrier PVC Transparent
(Cables B36 always with
2 pcs. I/D Carrier)

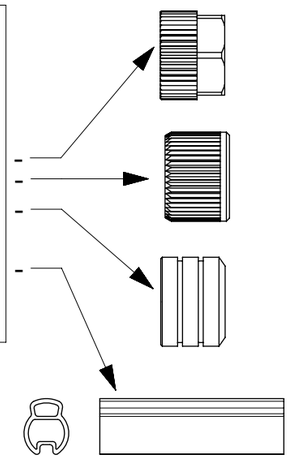

CABLE INFORMATION (for more information see Cable Data Sheet).

CABLE TYPE	NO. OF WIRES	CROSS SECTION	CABLE JACKET	UL	CSA	STATIC: TEMP. / BENDING RADIUS	DYNAMIC: TEMP. / BENDING RADIUS	DRAG CHAIN: TEMP. / BENDING RADIUS	DRAG CHAIN	CABLE SPEC. DRAWING
B30	3 / 4 / 5	0.34mm²	TPU Black	UL 21215/758	C22.2 I/II A/B 80°/600V	-40°C to +90°C 5xO.D.	-25°C to +80°C 7.5xO.D.	-5°C to +60°C 7.5xO.D.	up to 5 000 000 cycles at temp 20°C	SD-120209-001
B33	4 / 5	0.34mm²	TPU Gray							SD-120209-001
B36	4 / 5	0.34mm²	TPU Orange							SD-120209-001
B39	5	0.75mm²	TPU Gray							n/a
B41	8	0.25mm²	TPU Black							SD-120209-006
B42	5	0.34mm²	TPU Black							SD-120209-001
B49	8	0.25mm²	TPU Orange							SD-120209-006
B55	3 / 4 / 5	0.34mm²	TPU Yellow							n/a

TABLE OF LENGTH TOLERANCES		
OVER	UP TO AND INCLUDING	TOLERANCE
0	1000	+40 0
1000	5000	+60 0
5000	10000	+80 0
10000	20000	+140 0
20000	30000	+160 0
30000	>	+1% OF LENGTH

DOCUMENT STATUS	P1	RELEASE DATE	2021/10/18 12:08:57

FORMAT: master-tb-prod-A3
REVISION: J1
DATE: 2021/05/01

THIS DRAWING CONTAINS INFORMATION THAT IS PROPRIETARY TO MOLEX ELECTRONIC TECHNOLOGIES, LLC AND SHOULD NOT BE USED WITHOUT WRITTEN PERMISSION

FUNCTIONAL SYMBOLS
FA = 0
FC = 0
FP = 0

DIVISIONAL SYMBOLS

DIMENSION UNITS	SCALE
mm	1:1

GENERAL TOLERANCES (UNLESS SPECIFIED)

ANGULAR TOL	± °
4 PLACES	±
3 PLACES	±
2 PLACES	±
1 PLACE	±
0 PLACES	±

DRAFT WHERE APPLICABLE MUST REMAIN WITHIN DIMENSIONS

CURRENT REV DESC: STANDARDIZATION

EC NO: 681756
DRWN: MKOWALCZYK01 2021/10/18
CHK'D: ALEKSP3 2021/10/18
APPR: KMARCINIAK01 2021/10/18

INITIAL REVISION:
DRWN: AKONDRACIUK 2016/11/26
APPR: MIWASIECZKO 2016/12/06

THIRD ANGLE PROJECTION | DRAWING: A3-SIZE | SERIES: 120065

molex

CSE M12 XP AC FE STR WSOR XM SE UNSH

PRODUCT CUSTOMER DRAWING

DOCUMENT NUMBER	DOC TYPE	DOC PART	REVISION
1200652251	PSD	00P	B2

MATERIAL NUMBER: SEE PART LIST | CUSTOMER | SHEET NUMBER: 2 OF 2