FRONT VIEW — FEMALE INSERT WIRING COLOR CODE

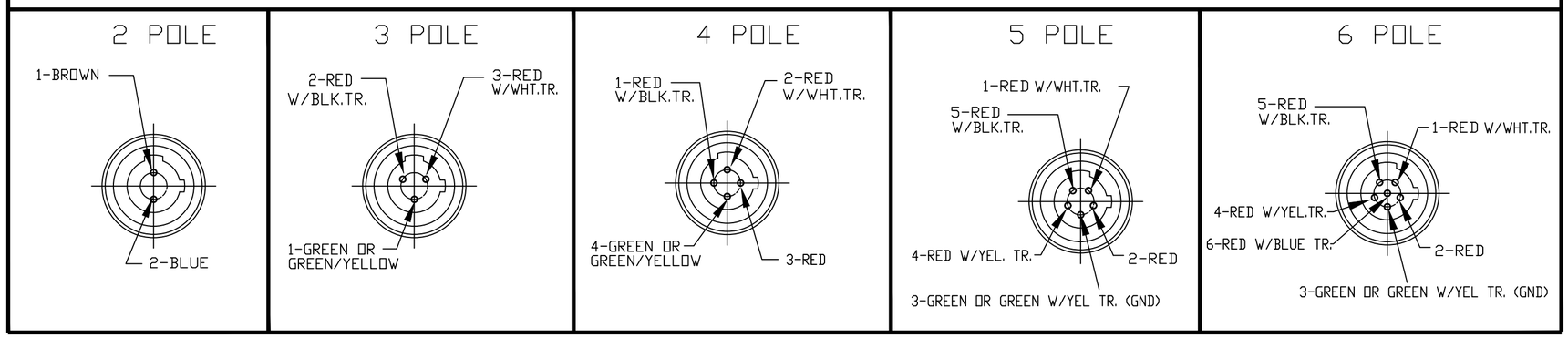

CABLE LENGTH TOLERANCES
>.3M [1FT]: +19mm-0 [+.75in-0]
.3 - .9M [1 - 3FT]: +44.5mm-0 [+1.75in-0]
.9 - 1.8M [3 - 6FT]: +55.6mm-0 [+2.19in-0]
1.8 - 3.7M [6 - 12FT: +88.9mm-0 [+3.50in-0]
3.7 - 7.3M [12 - 24FT]: +165.1mm-0 [+6.50in-0]
7.3-14.6M [24 - 48FT]: +317.5mm-0 [+12.50in-0]
14.6 - 30.5M [48-100FT]: +622.3mm-0 [+24.50in-0]
OVER 30M [100FT] +2% OF FINISHED LENGTH

PART NUMBER LEGEND

702000D02F0601

CABLE TYPE
22AWG SHLD, PVC

COUPLING NUT OPTIONS
BLANK= DIE CAST ZINC
1= 303 STAINLESS STEEL
2= NON METALLIC
8= 316 ST. STEEL

FINISHED LENGTH:
F010= 1 FOOT
F100= 10FEET

M005= 0.5 METER
M010= 1 METER
M100= 10 METER

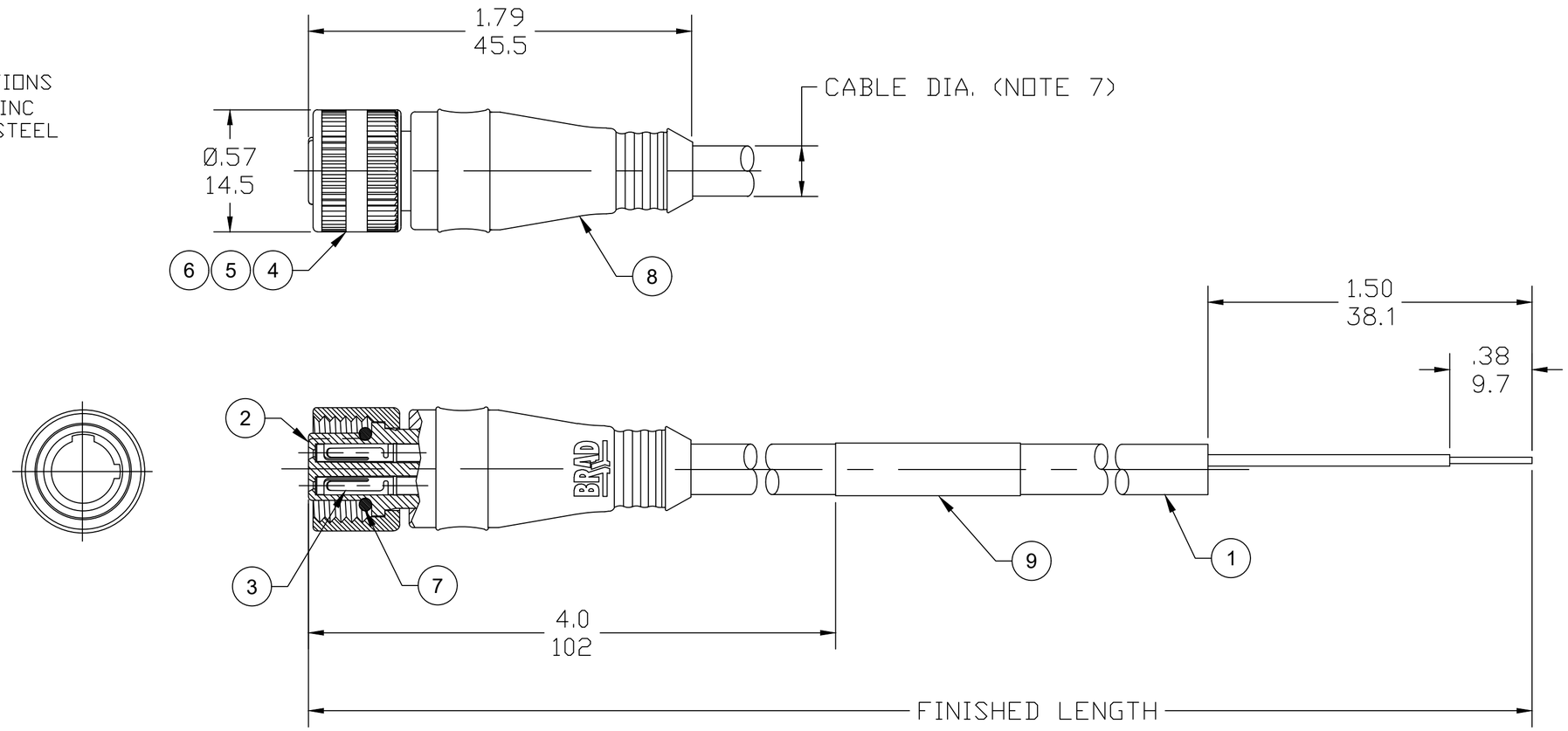

NOTES:
1. MATERIAL: AS NOTED
2. FINISH: AS NOTED
3. ELECTRICAL:
   VOLTAGE: 250 VOLTS AC/DC
   CURRENT: 4A
4. TEMP RATING: -20°TO +105°C
5. PROTECTION: IP67 (WHEN MATED)
6. COUPLING THREAD: 1/2-20 UNF
7. CABLE DIA: MIN .20 FOR 2 CIR, MAX .25 FOR 6 CIR
8. ALL DIMS ARE FOR REFERENCE
   UNLESS NOTED OTHERWISE

PART NO.	ENGINEERING NO.	FINISHED LENGTH
1200720058	702000D02F020	2 FEET
1200720062	702000D02F0601	6 FEET
1200720574	706000D02F1202	12 FEET

ITEM	DESCRIPTION	MATERIAL	FINISH
9	WRAP LABEL	VINYL	BLACK/YELLOW
8	OVERMOLD	TPC	YELLOW
7	O-RING	NITRILE	RED
6	COUPLING NUT, FEMALE THD (-2 OPT)	DELRIN	WHITE
5	COUPLING NUT, FEMALE THD (-1 & -8 OPT)	ST. STEEL	PASSIVATED
4	COUPLING NUT, FEMALE THD (STD OPT)	ZINC DIE-CAST	BLACK
3	CONTACT SOCKET	COPPER ALLOY	GOLD PLATED
2	FEMALE INSERT	NYLON	BLACK
1	CABLE, 22 AWG, SHIELDED	PVC JACKET	YELLOW

(B)

DOCUMENT STATUS	P1	RELEASE DATE	2020/07/30 20:12:31

THIS DRAWING CONTAINS INFORMATION THAT IS PROPRIETARY TO MOLEX ELECTRONIC TECHNOLOGIES, LLC AND SHOULD NOT BE USED WITHOUT WRITTEN PERMISSION

FUNCTIONAL SYMBOLS: FA=0, FC=0, FP=0
DIVISIONAL SYMBOLS

DIMENSION UNITS: INCH/MM
SCALE: NTS

GENERAL TOLERANCES (UNLESS SPECIFIED)

	mm	INCH
4 PLACES	±----	±----
3 PLACES	±----	±----
2 PLACES	±----	±----
1 PLACE	±----	±----
0 PLACES	±----	±----
ANGULAR TOL ±	---- °	

DRAFT WHERE APPLICABLE MUST REMAIN WITHIN DIMENSIONS

CURRENT REV DESC: UPDATE ITEM LIST

EC NO: 642158
DRWN: CCHRASTKA 2020/07/23
CHK'D: ALEON01 2020/07/24
APPR: BWOODMAN 2020/07/30

INITIAL REVISION:
DRWN: RSTONE 2017/07/14
APPR: BWOODMAN 2017/07/21

THIRD ANGLE PROJECTION | DRAWING: C-SIZE | SERIES: 120072

molex

MIC CORD ASSY 2-6 POLE
FEMALE, DUAL KEY 22 AWG SHIELDED PVC

PRODUCT CUSTOMER DRAWING

DOCUMENT NUMBER	DOC TYPE	DOC PART	REVISION
SD-120072-022	PSD	001	B

MATERIAL NUMBER	CUSTOMER	SHEET NUMBER
SEE TABLE	GENERAL MARKET	1 OF 1

FORMAT: IN-ACAD-tb-prod-C
REVISION: B
DATE: 2020/01/14