FEMALE PLUG M8 STRAIGHT TO MALE PLUG M8 STRAIGHT

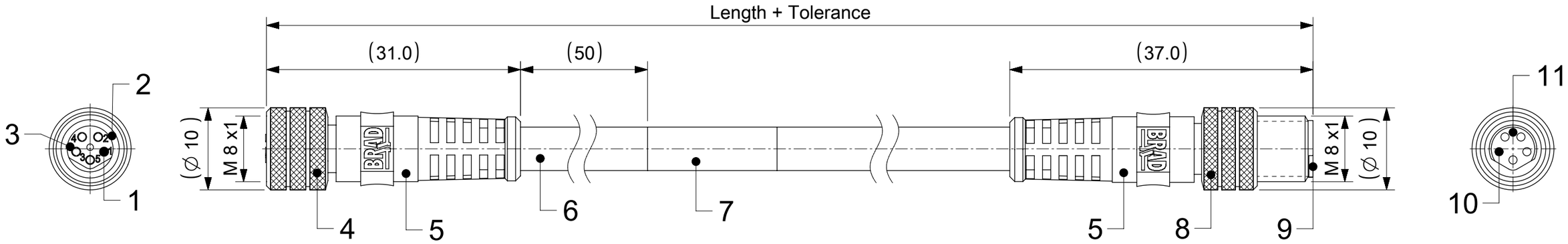

NOTES:

RATED VOLTAGE: 3 contacts 60V AC/DC
4 and 5 contacts 30V AC/DC
CURRENT RATING: 3, 4, 5 contacts 3A
PROTECTION CLASS: IP 67 in mated and locked position.
TEMPERATURE: SEE CABLE INFORMATION
INSULATION RESISTANCE: 10^8 Ω MIN.
MATING CYCLES: MIN. 100
PACKAGING ACCORDING TO PACKAGING SPEC. 1201202000

CONTACTS POSITION FRONT VIEW:

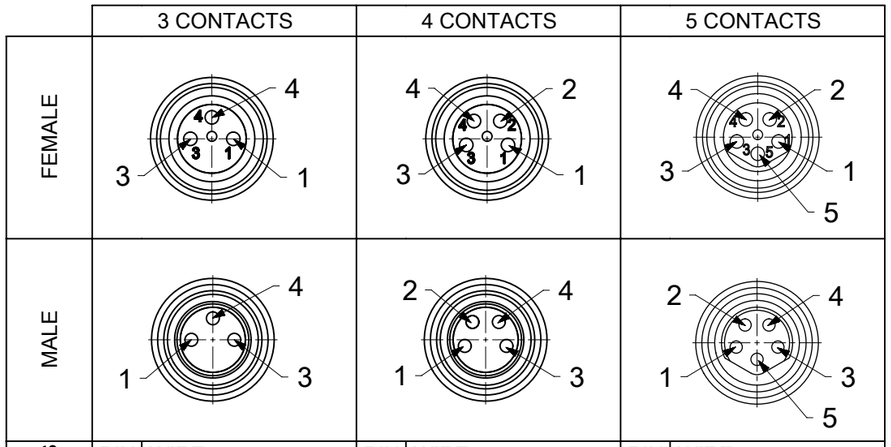

	3 CONTACTS		4 CONTACTS		5 CONTACTS	
	PIN	WIRE	PIN	WIRE	PIN	WIRE
	1	BROWN	1	BROWN	1	BROWN
	3	BLUE	2	WHITE	2	WHITE
	4	BLACK	3	BLUE	3	BLUE
			4	BLACK	4	BLACK
					5	GREY

CODING ACCORDING TO IEC 61076-2-104

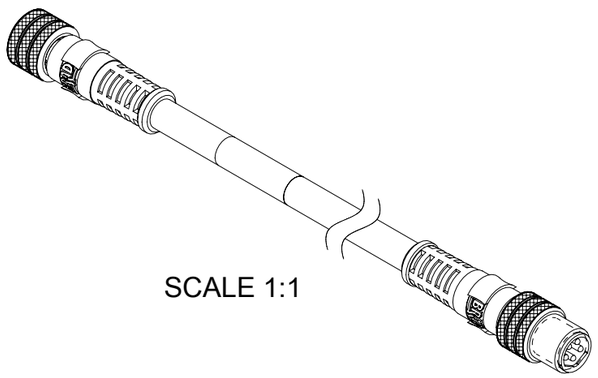

SCALE 1:1

FOR OPTIONS SEE - NUMERICAL CODE - ON SHEET 2

ITEM	QTY.	DESCRIPTION	MATERIAL	FINISH
11	1	INSERT MALE BLACK	TPU	---
10	3 / 4 / 5	CONTACT M8 MALE	BRASS	SELECTIVE Au OVER Ni
9	1	SLEEVE	BRASS	NICKEL
8	1	COUPLING NUT M8 MALE	BRASS	NICKEL
7	1	LABEL YELLOW	VINYL	---
	-	PRINTING FOR CABLES Ixx	---	---
6	-	CABLE	SEE SHEET 2	---
5	-	OVERMOULDING BLACK	TPU	---
4	1	COUPLING NUT M8 FEMALE	BRASS	NICKEL
3	1	INSERT FEMALE BLACK	TPU	---
2	1	O-RING RED	FKM	---
1	3 / 4 / 5	CONTACT M8 FEMALE	BRASS	SELECTIVE Au OVER Ni

THIS DRAWING CONTAINS INFORMATION THAT IS PROPRIETARY TO MOLEX ELECTRONIC TECHNOLOGIES, LLC AND SHOULD NOT BE USED WITHOUT WRITTEN PERMISSION

FUNCTIONAL SYMBOLS: FA = 0, FC = 0, FP = 0
DIVISIONAL SYMBOLS

DIMENSION UNITS: mm
SCALE: 2:1

GENERAL TOLERANCES (UNLESS SPECIFIED)

ANGULAR TOL	±	1.0 °
4 PLACES	±	
3 PLACES	±	
2 PLACES	±	0.05
1 PLACE	±	0.3
0 PLACES	±	0.5

DRAFT WHERE APPLICABLE MUST REMAIN WITHIN DIMENSIONS

CURRENT REV DESC: PACKAGING SPEC ADDED

EC NO: 770174
DRWN: RSCHIEBER 2023/10/18
CHK'D: RSILLER 2023/11/30
APPR: RSILLER 2023/11/30

INITIAL REVISION:
DRWN: JMARSZALEK 2016/09/15
APPR: RSILLER 2017/01/11

THIRD ANGLE PROJECTION
DRAWING: A3-SIZE
SERIES: 120087

molex

CSE M8 M8 XP AC BC FE STR MA STR XM

PRODUCT CUSTOMER DRAWING

DOCUMENT NUMBER	DOC TYPE	DOC PART	REVISION
1200878240	PSD	000	A17

MATERIAL NUMBER	CUSTOMER	SHEET NUMBER
SEE PART LIST	GENERAL MARKET	1 OF 4

DOCUMENT STATUS	P1	RELEASE DATE	2023/11/30 13:31:02

FORMAT: master_Sealed-A3
REVISION: J
DATE: 2020/01/14

ENGINEERING NO. - NUMERICAL CODE (Available parts see PART LIST table. Other parts available upon request).

OPTIONS

4	4	X	0	3	0	X	X	X	X	X	X	X	X

- 44=Nano-Change M8x1 Double ended
- Contacts: 3=3 Contacts, 4=4 Contacts, 5=5 Contacts
- Heads style: 030=Plug Female Straight to Plug Male Straight
- Cable type: See Table
- Units: M=Meter, C=Centimeter
- Length Examples: 005=0.5 unit, 010=1 unit, 100=10 unit
- Overmold color: Blank (Standard)=Black, A=Grey / G=Black / Y=Yellow
- Coupling Nut: Blank (Standard)=Knurled Brass Ni Plated, 9=Knurled / Hexagonal SW9 Brass Ni Plated
- H= 2 pcs. of I/D Carrier PVC Transparent (Cables Ixx & P82 always with 2 pcs. of I/D Carrier)

COUPLING NUT

FEMALE MALE

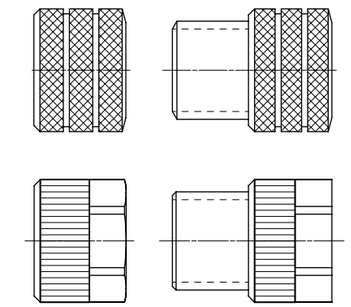

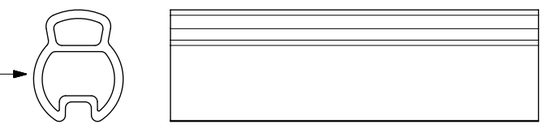

CABLE INFORMATION (for more information see Cable Data Sheet).

CABLE TYPE	NO. OF WIRES	CROSS SECTION	CABLE JACKET	UL	CSA	STATIC: TEMP. / BENDING RADIUS	DYNAMIC: TEMP. / BENDING RADIUS	DRAG CHAIN	SHIELD
E02	3 / 4 / 5	0.25 mm²	PVC BLACK	UL 2464/1729	C22.2 I/II A/B 80°C/300V	-30°C to +80°C, >10xO.D.	-10°C to +80°C, >15xO.D.	-	-
H08	3 / 4 / 5	0.25 mm²	PUR BLACK LS0H	UL 21198/10493	C22.2 I/II A/B 80°C/300V	-40°C to +80°C, >5xO.D.	-25°C to +80°C, >10xO.D.	2 000 000 cycles at 20°C, Temp. range +5°C to +60°C	-
I02	3 / 4	0.25 mm²	PVC CEI GREY	-	-	-30°C to +70°C	-5°C to +70°C	-	-
P02	3 / 4 / 5	0.25 mm²	PUR / PVC BLACK	-	-	-30°C to +80°C, >7xO.D.	-5°C to +80°C, >15xO.D.	-	-
P82	3	0.34 mm²	PUR IRR ORANGE	-	-	-50°C to +105°C, >5xO.D.	-40°C to +105°C, >7.5xO.D.	-	-
H70	5	0.25 mm²	PUR BLACK	-	-	-40°C to +80°C, >5xO.D.	-25°C to +80°C, >10xO.D.	2 000 000 cycles at 20°C, Temp. range +5°C to +60°C	-

CABLE LENGTH TOLERANCES

OVER	UP TO AND INCLUDING	TOLERANCES
0	305mm	+19mm
305mm	915mm	+45mm
915mm	1830mm	+56mm
1830mm	3660mm	+89mm
3660mm	7320mm	+165mm
7320mm	14640mm	+317mm
14640mm	30500mm	+610mm
30500mm	>	+2% of finished length

THIS DRAWING CONTAINS INFORMATION THAT IS PROPRIETARY TO MOLEX ELECTRONIC TECHNOLOGIES, LLC AND SHOULD NOT BE USED WITHOUT WRITTEN PERMISSION

FUNCTIONAL SYMBOLS: = 0 / = 0 / = 0

DIVISIONAL SYMBOLS

DIMENSION UNITS	SCALE
mm	2:1

GENERAL TOLERANCES (UNLESS SPECIFIED)

ANGULAR TOL	±	1.0 °
4 PLACES	±	
3 PLACES	±	
2 PLACES	±	0.05
1 PLACE	±	0.3
0 PLACES	±	0.5

DRAFT WHERE APPLICABLE MUST REMAIN WITHIN DIMENSIONS

CURRENT REV DESC: PACKAGING SPEC ADDED

EC NO: 770174
DRWN: RSCHIEBER 2023/10/18
CHK'D: RSILLER 2023/11/30
APPR: RSILLER 2023/11/30

INITIAL REVISION:
DRWN: JMARSZALEK 2016/09/15
APPR: RSILLER 2017/01/11

THIRD ANGLE PROJECTION | DRAWING: A3-SIZE | SERIES: 120087

molex

CSE M8 M8 XP AC BC FE STR MA STR XM

PRODUCT CUSTOMER DRAWING

DOCUMENT NUMBER	DOC TYPE	DOC PART	REVISION
1200878240	PSD	000	A17

MATERIAL NUMBER	CUSTOMER	SHEET NUMBER
SEE PART LIST	GENERAL MARKET	2 OF 4

DOCUMENT STATUS	P1	RELEASE DATE	2023/11/30 13:31:02

FORMAT: master-tb-prod-A3
REVISION: J
DATE: 2020/01/14

PART LIST

No.	Molex PN	Engineering No.	Cable Length
1	1200271413	445030H08M010	1m
2	1200280321	443030E02M020	2m
3	1200280343	443030E02M030	3m
4	1200280384	443030I02M006	0.6m
5	1200280427	443030I02M010	1m
6	1200280462	443030E02M050	5m
7	1200280464	443030E02M040	4m
8	1200281222	443030P82M003	0.3m
9	1200281282	443030E02M025	2.5m
10	1200281284	444030E02M015	1.5m
11	1200281309	445030P02M010	1m
12	1200281310	445030P02M050	5m
13	1200870687	445030P02M006	0.6m
14	1200870688	445030P02M030	3m
15	1200875035	443030E02M006	0.6m
16	1200878025	443030P82M006	0.6m
17	1200878035	445030P02M020	2m
18	1200878036	445030P02M040	4m
19	1200878037	445030P02M100	10m
20	1200878124	444030H08M003	0.3m
21	1200878126	443030H08M030	3m
22	1200878127	443030H08M050	5m
23	1200878139	445030P02M250	25m
24	1200878140	443030P02M010	1m
25	1200878141	443030P02M006	0.6m
26	1200878149	443030H08M020	2m
27	1200878161	444030E02M200	20m
28	1200878166	443030H08M040	4m
29	1200878233	443030P02M050	5m
30	1200878234	443030P02M100	10m
31	1200878239	445030E02M006	0.6m
32	1200878240	445030E02M020	2m
33	1200878241	445030E02M050	5m
34	1200878258	443030E02M010	1m
35	1200878272	443030E02M002G	0.2m

No.	Molex PN	Engineering No.	Cable Length
36	1200878273	443030E02M003	0.3m
37	1200878274	443030E02M015	1.5m
38	1200878275	443030E02M025H	2.5m
39	1200878276	443030E02M050H	5m
40	1200878277	443030E02M060	6m
41	1200878278	443030E02M100	10m
42	1200878279	443030E02M150	15m
43	1200878280	443030E02M010G	1m
44	1200878281	443030E02M012G	1.2m
45	1200878282	443030I02M003	0.3m
46	1200878283	443030I02M015	1.5m
47	1200878284	443030I02M020	2m
48	1200878285	443030I02M030	3m
49	1200878286	443030I02M040	4m
50	1200878287	443030I02M050	5m
51	1200878288	443030I02M060	6m
52	1200878289	443030I02M070	7m
53	1200878290	443030I02M100	10m
54	1200878291	443030I02M150	15m
55	1200878292	443030P02M003	0.3m
56	1200878293	443030P02M015	1.5m
57	1200878294	443030P02M020	2m
58	1200878295	443030P02M025	2.5m
59	1200878296	443030P02M030	3m
60	1200878297	443030P02M030G	3m
61	1200878298	443030P02M035	3.5m
62	1200878299	443030P02M040	4m
63	1200878300	443030P02M060	6m
64	1200878301	443030P02M070	7m
65	1200878302	443030P02M150	15m
66	1200878346	444030E02M003	0.3m
67	1200878347	444030E02M005	0.5m
68	1200878348	444030E02M006	0.6m
69	1200878349	444030E02M010	1m
70	1200878350	444030E02M020	2m

No.	Molex PN	Engineering No.	Cable Length
71	1200878351	444030E02M025	2.5m
72	1200878352	444030E02M030	3m
73	1200878353	444030E02M040	4m
74	1200878354	444030E02M050	5m
75	1200878355	444030E02M100	10m
76	1200878356	444030H08M020	2m
77	1200878357	444030P02M003	0.3m
78	1200878358	444030P02M006	0.6m
79	1200878359	444030P02M010	1m
80	1200878360	444030P02M020	2m
81	1200878361	444030P02M030	3m
82	1200878362	444030P02M050	5m
83	1200878494	443030E02M070	7m
84	1200878495	444030H08M010	1m
85	1200878500	443030H08M010	1m
86	1200878509	444030H08M050	5m
87	1200878535	443030E02M020Y	2m
88	1200878536	443030E02M050Y	5m
89	1200878537	443030E02M040Y	4m
90	1200878538	443030E02M006Y	0.6m
91	1200878539	443030H08M050Y	5m
92	1200878540	443030H08M020Y	2m
93	1200878541	443030E02M010Y	1m
94	1200878558	443030H08M006	0.6m
95	1200878559	444030H08M006	0.6m
96	1200878574	444030E02M003H	0.3m
97	1200878575	444030E02M030H	3m
98	1200878576	443030E02M003H	0.3m
99	1200878577	444030E02M006H	0.6m
100	1200878596	443030P02M010H	1m
101	1200878626	443030H08M080	8m
102	1200878627	445030H08M040	4m
103	1200878635	443030E02M080	8m
104	1200878636	443030H08M055	5.5m
105	1200878642	443030E02M006H	0.6m

No.	Molex PN	Engineering No.	Cable Length
106	1200878643	443030E02M010H	1m
107	1200878644	443030E02M020H	2m
108	1200878645	443030E02M030H	3m
109	1200878655	443030E02M040H	4m
110	1200878658	444030E02M250	25m
111	1200878661	444030E02M015H	1.5m
112	1200878663	443030E02M060H	6m
113	1200878665	444030E02M005H	0.5m
114	1200878666	444030E02M025H	2.5m
115	1200878671	443030E02M080H	8m
116	1200878689	443030E02M015H	1.5m
117	1200878692	444030E02M010H	1m
118	1200878693	444030E02M020H	2m
119	1200878699	443030H08M055H	5.5m
120	1200878808	443030H08M065H	6.5m
121	1200878809	443030E02M0039H	0.3m
122	1200878810	444030E02M0069H	0.6m
123	1200878811	444030E02M0309H	3m
124	1200878812	444030P02M100	10m
125	1200878828	444030E02M0109H	1m
126	1200878834	443030E02M1009H	10m
127	1200878843	444030H08M100	10m
128	1200878844	444030H08M250	25m
129	1200878847	445030H08M006	0.6m
130	1200878850	443030E02M0159H	1.5m
131	1200878923	443030E02M1509H	15m
132	1200878941	444030H08M030	3m
133	1200878946	445030H08M020	2m
134	1200878947	445030H08M050	5m
135	1200878950	445030E02M010	1m
136	1200878951	444030H08C350	0.35m
137	1200878952	444030H08C750	0.75m
138	1200878978	443030H08M100	10m
139	1200888155	445030H70M020	2m
140	1200878982	443030H08M003H	0.3m

No.	Molex PN	Engineering No.	Cable Length
141	1200878983	443030H08M015H	1.5m
142	1200878984	443030H08M045H	4.5m
143	1200878985	443030H08M065	6.5m
144	1200878986	443030H08M075H	7.5m
145	1200878987	444030H08M015H	1.5m
146	1200878988	444030H08M025H	2.5m
147	1200878998	444030H08M030H	3m
148	1200878999	443030H08M050H	5m
149	1200879001	443030H08M040H	4m
150	1200878997	444030H08M003H	0.3m

No.	Molex PN	Engineering No.	Cable Length
151	1200879003	444030H08M020H	2m
152	1200879004	444030H08M010H	1m
153	1200879007	444030H08M006H	0.6m
154	1200879010	444030H08M030H	3m
155	1200879035	443030H08M006H	0.6m
156	1200879036	443030H08M010H	1m
157	1200879037	443030H08M025H	2.5m
158	1200879050	443030H08M080H	8m
159	1200879052	444030H08M035H	3.5m
160	1200879053	444030H08M040H	4m
161	1200879054	444030H08M050H	5m

DOCUMENT STATUS	P1	RELEASE DATE	2023/11/30 13:31:02

THIS DRAWING CONTAINS INFORMATION THAT IS PROPRIETARY TO MOLEX ELECTRONIC TECHNOLOGIES, LLC AND SHOULD NOT BE USED WITHOUT WRITTEN PERMISSION

FUNCTIONAL SYMBOLS	FA = 0, FC = 0, FP = 0	DIVISIONAL SYMBOLS	
DIMENSION UNITS	mm	SCALE	2:1
GENERAL TOLERANCES (UNLESS SPECIFIED)			
ANGULAR TOL	± 1.0 °	4 PLACES	±
3 PLACES	±	2 PLACES	± 0.05
1 PLACE	± 0.3	0 PLACES	± 0.5
DRAFT WHERE APPLICABLE MUST REMAIN WITHIN DIMENSIONS			

CURRENT REV DESC: PACKAGING SPEC ADDED

EC NO: 770174
DRWN: RSCHIEBER 2023/10/18
CHK'D: RSILLER 2023/11/30
APPR: RSILLER 2023/11/30

INITIAL REVISION:
DRWN: JMARSZALEK 2016/09/15
APPR: RSILLER 2017/01/11

molex

CSE M8 M8 XP AC BC FE STR MA STR XM

PRODUCT CUSTOMER DRAWING

DOCUMENT NUMBER	DOC TYPE	DOC PART	REVISION
1200878240	PSD	000	A17

THIRD ANGLE PROJECTION	DRAWING	SERIES	MATERIAL NUMBER	CUSTOMER	SHEET NUMBER
	A3-SIZE	120087	SEE PART LIST	GENERAL MARKET	3 OF 4

PART LIST

No.	Molex PN	Engineering No.	Cable Length
162	1200879055	443030H08M060H	6m
163	1200879056	443030H08M020H	2m
164	1200879074	444030H08M060H	6m
165	1200879080	443030H08M060	6m
166	1200879081	443030H08M120	12m
167	1200879082	443030H08M140	14m
168	1200879083	443030H08M160	16m
169	1200879084	443030H08M180	18m
170	1200879085	443030H08M200	20m
171	1200879086	443030H08M220	22m
172	1200879087	443030H08M240	24m
173	1200878980	445030H08M030	3m
174	1200879090	443030H08M035H	3.5m

THIS DRAWING CONTAINS INFORMATION THAT IS PROPRIETARY TO MOLEX ELECTRONIC TECHNOLOGIES, LLC AND SHOULD NOT BE USED WITHOUT WRITTEN PERMISSION

FUNCTIONAL SYMBOLS: FA = 0, FC = 0, FP = 0

DIVISIONAL SYMBOLS

DIMENSION UNITS	SCALE
mm	1:1

GENERAL TOLERANCES (UNLESS SPECIFIED)

ANGULAR TOL	±	1.0 °
4 PLACES	±	
3 PLACES	±	
2 PLACES	±	0.05
1 PLACE	±	0.3
0 PLACES	±	0.5

DRAFT WHERE APPLICABLE MUST REMAIN WITHIN DIMENSIONS

CURRENT REV DESC: PACKAGING SPEC ADDED

EC NO: 770174
DRWN: RSCHIEBER 2023/10/18
CHK'D: RSILLER 2023/11/30
APPR: RSILLER 2023/11/30

INITIAL REVISION:
DRWN: JMARSZALEK 2016/09/15
APPR: RSILLER 2017/01/11

molex

CSE M8 M8 XP AC BC FE STR MA STR XM

PRODUCT CUSTOMER DRAWING

DOCUMENT NUMBER	DOC TYPE	DOC PART	REVISION
1200878240	PSD	000	A17

THIRD ANGLE PROJECTION	DRAWING	SERIES	MATERIAL NUMBER	CUSTOMER	SHEET NUMBER
	A3-SIZE	120087	SEE PART LIST	GENERAL MARKET	4 OF 4

DOCUMENT STATUS	P1	RELEASE DATE	2023/11/30 13:31:02

FORMAT: master-Sheet-A3
REVISION: J
DATE: 2020/01/