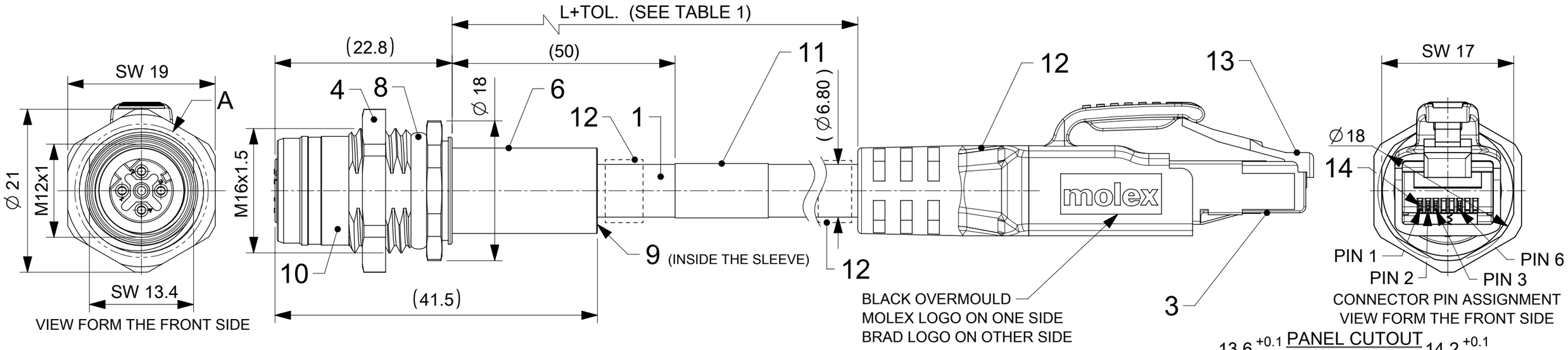

PANEL CUTOUT

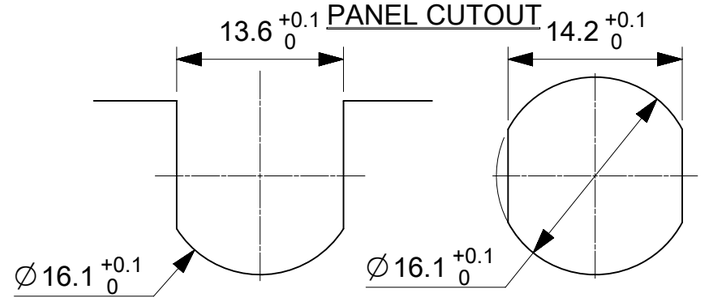

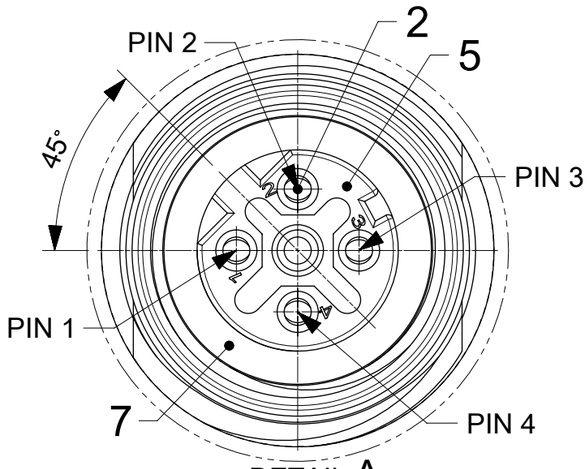

DETAIL A
SCALE 4:1

- TWISTED PAIR

WIRING DIAGRAM

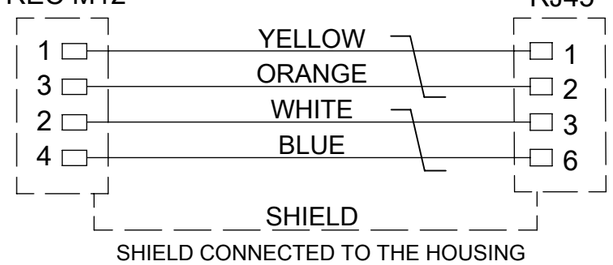

SHIELD CONNECTED TO THE HOUSING

TECHNICAL DATA :
REC M12 D-Coded to RJ45 CAT5e Cordset AWG22
straight green inline 360° shielded.

Poles : 4
Max. Voltage : 30V A.C. or 42V D.C.
Max. Current : 1.5A
Contact resistance : ≤10 mΩ
Insulation Withstand : >100MΩ
Protection REC. M12 / RJ45 : IP67 (MOUNTED) / IP20
REC. M12 : IP20 (UNMOUNTED)
Temparature range : -25°C to 85°C

Transmission characteristics
ACCORDING TO ISO 11801 CATEGORY 5e
PATCH CORD PROFINET TYPE C

Packaging :
The cordsets are packed in a polybag.

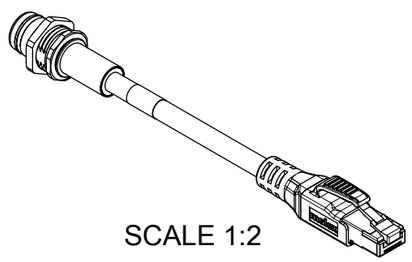

SCALE 1:2

TABLE 2

CABLE LENGTH TOLERANCES	
LENGTH	TOLERANCE
0m-1m	+40 mm
>1m-5m	+60 mm
>5m-10m	+80 mm
>10m-20m	+140 mm
>20m-30m	+160 mm
>30m	+1% length

TABLE 2 2 QTY ID CARRIER APPLICABLE, IF ENGINEERING NO. HAS "H" {SEE PART LIST)

ITEM	QTY	DESCRIPTION	MATERIAL	FINISH
1	-	CABLE 2x2x22AWG SHLD	TPU	GREEN
2	4	CONTACT 10 FEMALE	BRONZE	SELECTIVE GOLD OVER NICKEL
3	1	RJ45 PLUG SHIELD	BRASS	TIN
4	1	NUT M16x1.5	BRASS	NICKEL PLATED
5	1	INSERT M12 FEMALE 4P DC	TPU	BLACK
6	1	SLEEVE STR L25D10	BRASS	NICKEL PLATED
7	1	O-RING	FPM	RED
8	1	O-RING	NBR	BLACK
9	-	POTTING MATERIAL	WEVO	-
10	1	SHELL U12 M12x1 M16x1.5 BM	BRASS	NICKEL PLATED
11	1	LABEL	-	-
12	-	MOULDING MATERIAL	TPU	BLACK
13	1	PLUG RJ45 TRANSPARENT	PC	-
14	4	CONTACT RJ45	PB	SELECTIVE GOLD OVER NICKEL
15	-	ID CARRIER	PVC	TRANSPARENT

THIS DRAWING CONTAINS INFORMATION THAT IS PROPRIETARY TO MOLEX ELECTRONIC TECHNOLOGIES, LLC AND SHOULD NOT BE USED WITHOUT WRITTEN PERMISSION

FUNCTIONAL SYMBOLS: FA = 0, FC = 0, FD = 0
DIVISIONAL SYMBOLS

DIMENSION UNITS: mm
SCALE: 2:1

GENERAL TOLERANCES (UNLESS SPECIFIED)

ANGULAR TOL	±	1.0 °
4 PLACES	±	
3 PLACES	±	
2 PLACES	±	0.05
1 PLACE	±	0.3
0 PLACES	±	0.5

DRAFT WHERE APPLICABLE MUST REMAIN WITHIN DIMENSIONS

CURRENT REV DESC: NEW PNS ADDED; BOM UPDATED

EC NO: 677462
DRWN: SSM 2021/07/29
CHK'D: RSILLER 2021/09/13
APPR: RSILLER 2021/09/13

INITIAL REVISION:
DRWN: FGAIK 2016/12/01
APPR: RSILLER 2016/12/05

THIRD ANGLE PROJECTION
DRAWING: A3-SIZE
SERIES: 120108

molex

REC U12 ETH 4P DC FE WSOR RJ45 XM
M16 BM DE SHLD D6.8 GN BRA

PRODUCT CUSTOMER DRAWING

DOCUMENT NUMBER	DOC TYPE	DOC PART	REVISION
1201088377	PSD	000	B2

MATERIAL NUMBER	CUSTOMER	SHEET NUMBER
SEE PART LIST	GENERAL MARKET	1 OF 2

DOCUMENT STATUS	P1	RELEASE DATE	2021/09/13 14:20:59

FORMAT: molex_Standard-A3
REVISION: J
DATE: 2020/01/14

TABLE 1		
MOLEX PN	ENGINEERING NO.	L [m]
1201088530	ERWPAU7012M003	0.3
1201088377	ERWPAU7012M005	0.5
1201080519	ERWPAU7012M010	1
1201088750	ERWPAU7012M015	1.5
1201080520	ERWPAU7012M020	2
1201088751	ERWPAU7012M025	2.5
1201088378	ERWPAU7012M030	3
1201088379	ERWPAU7012M040	4
1201088380	ERWPAU7012M050	5
1201088794	ERWPAU7012M100	10
1201088795	ERWPAU7012M150	15
WITH ID CARRIER		
1201088979	ERWPAU7012M004H	0.4
1201088980	ERWPAU7012M005H	0.5
1201088981	ERWPAU7012M006H	0.6
1201088982	ERWPAU7012M010H	1
1201088983	ERWPAU7012M020H	2
1201089035	ERWPAU7012M030H	3
1201089036	ERWPAU7012M040H	4
1201088984	ERWPAU7012M050H	5
1201089037	ERWPAU7012M060H	6
1201089038	ERWPAU7012M070H	7
1201089039	ERWPAU7012M080H	8
1201089040	ERWPAU7012M100H	10
1201089041	ERWPAU7012M120H	12
1201089042	ERWPAU7012M150H	15
1201089043	ERWPAU7012M200H	20
1201089044	ERWPAU7012M250H	25
1201089045	ERWPAU7012M300H	30
1201089046	ERWPAU7012M350H	35
1201089047	ERWPAU7012M400H	40
1201089048	ERWPAU7012M450H	45
1201089049	ERWPAU7012M500H	50
1201089050	ERWPAU7012M550H	55
1201089051	ERWPAU7012M600H	60
1201089052	ERWPAU7012M650H	65
1201089053	ERWPAU7012M700H	70
1201089054	ERWPAU7012M750H	75
1201089055	ERWPAU7012M800H	80

THIS DRAWING CONTAINS INFORMATION THAT IS PROPRIETARY TO MOLEX ELECTRONIC TECHNOLOGIES, LLC AND SHOULD NOT BE USED WITHOUT WRITTEN PERMISSION

FUNCTIONAL SYMBOLS: FA = 0, FC = 0, FD = 0

DIVISIONAL SYMBOLS

DIMENSION UNITS	SCALE
mm	1:1

GENERAL TOLERANCES (UNLESS SPECIFIED)

ANGULAR TOL	±	1.0 °
4 PLACES	±	
3 PLACES	±	
2 PLACES	±	0.05
1 PLACE	±	0.3
0 PLACES	±	0.5

DRAFT WHERE APPLICABLE MUST REMAIN WITHIN DIMENSIONS

CURRENT REV DESC: NEW PNS ADDED; BOM UPDATED

EC NO: 677462
DRWN: SSM 2021/07/29
CHK'D: RSILLER 2021/09/13
APPR: RSILLER 2021/09/13

INITIAL REVISION:
DRWN: FGAIK 2016/12/01
APPR: RSILLER 2016/12/05

THIRD ANGLE PROJECTION | DRAWING: A3-SIZE | SERIES: 120108

molex

REC U12 ETH 4P DC FE WSOR RJ45 XM
M16 BM DE SHLD D6.8 GN BRA

PRODUCT CUSTOMER DRAWING

DOCUMENT NUMBER	DOC TYPE	DOC PART	REVISION
1201088377	PSD	000	B2

MATERIAL NUMBER	CUSTOMER	SHEET NUMBER
	GENERAL MARKET	2 OF 2

DOCUMENT STATUS	P1	RELEASE DATE	2021/09/13 14:20:59

FORMAT: master_Sized-A3
REVISION: J
DATE: 2020/01/14