3 POLE
M12 MALE

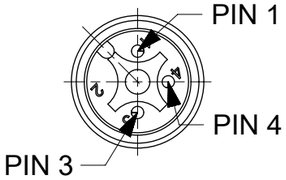

PIN	WIRE COLOR
1	BN
2	-
3	BU
4	BK
5	-

4 POLE
M12 MALE

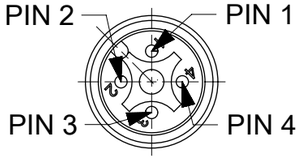

PIN	WIRE COLOR
1	BN
2	WH
3	BU
4	BK
5	-

5 POLE
M12 MALE

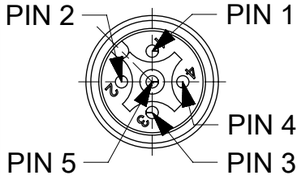

PIN	WIRE COLOR
1	BN
2	WH
3	BU
4	BK
5	GY

CODING ACCORDING TO IEC 61076-2-101

PART No MATRIX

Y	0	X	0	0	7	X	X	X	X	X	X	X	X	X

OPTIONS

Y0= ULTRA LOCK 2.0
SINGLE ENDED

POLES:
3 = 3 POLES
4 = 4 POLES
5 = 5 POLES

HEADER:
007= MALE RA

CABLE:
E03 - 3/4/5x0.34 PVC BLACK
B30 - 3/4/5x0.34 WSOR BLACK
H09 - 3/4/5x0.34 PUR-LS0H BLACK

UNIT:
M = METER
F = FEET
C = CENTIMETER
T = 10M

LENGTH:
EXAMPLE:
010 = 1 m
050 = 5 m
100 = 10 m

OVERMOLD:
BLANK = STANDARD BRAD:
-YELLOW IN THE USA
-BLACK IN EUROPE
A = GREY
E = RED
G = BLACK
Y = YELLOW
H = STD. COLOUR WITH TWO
ID-TAG CARRIERS

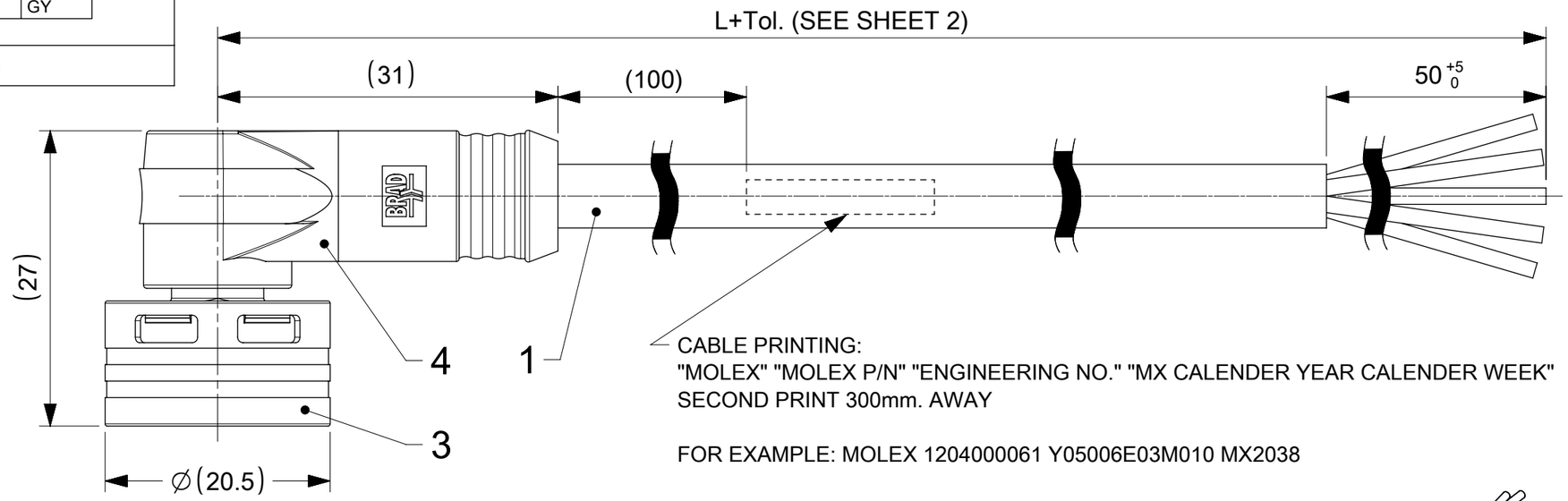

CABLE PRINTING:
"MOLEX" "MOLEX P/N" "ENGINEERING NO." "MX CALENDER YEAR CALENDER WEEK"
SECOND PRINT 300mm. AWAY

FOR EXAMPLE: MOLEX 1204000061 Y05006E03M010 MX2038

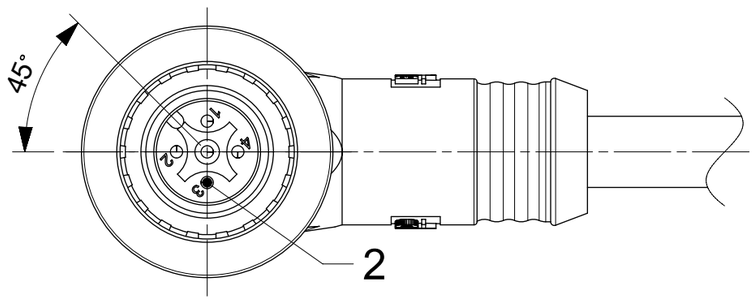

5 POLE SHOWN

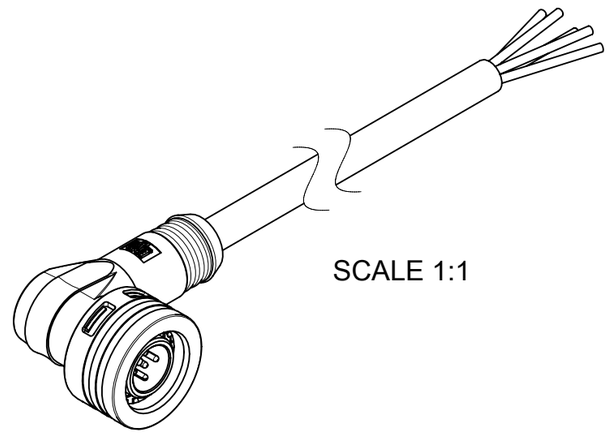

SCALE 1:1

NOTES:

1. PARTS ACC. TO PRODUCT SPECIFICATION
   1204000001 PS P10 AND IN STYLE OF IEC-61076-2-010
2. BOM & PART LIST - SEE SHEET 2
3. RATED VOLTAGE :
   3, 4 CONTACTS: 250V AC OR DC
   5 CONTACTS: 60V AC OR DC
   RATED CURRENT:
   3, 4, 5 CONTACTS: 4A, DERATING HAS TO BE CONSIDERED
   OVERVOLTAGE CATEGORY: 3
   POLLUTION DEGREE: 3, ONLY IN MATED AND LOCKED CONDITION
4. PROTECTION CLASS: IP 67, ONLY IN MATED AND LOCKED CONDITION
5. TEMPERATURE RANGE:
   TEMPERATURE PLUG/SOCKET: -40 °C TO +85 °C
   TEMPERATURE CABLE: SEE CABLE LIST
6. MECHANICAL OPERATIONS: 100 CYCLES
7. MATES WITH ULTRA-LOCK M12 FEMALE RECEPTACLES
8. PACKAGING: THE CORDSETS ARE SINGLE PACKED IN PLASTIC BAGS AND DELIVERED IN CARTON BOXES
9. UL CSA FILE REGISTRATION PENDING

DOCUMENT STATUS	P1	RELEASE DATE	2023/01/31 08:21:33

FORMAT: master-Sheet-A3
REVISION: J
DATE: 2020/01/14

FUNCTIONAL SYMBOLS
FA = 0
FC = 0
FP = 0
DIVISIONAL SYMBOLS

THIS DRAWING CONTAINS INFORMATION THAT IS PROPRIETARY TO MOLEX ELECTRONIC TECHNOLOGIES, LLC AND SHOULD NOT BE USED WITHOUT WRITTEN PERMISSION

DIMENSION UNITS	SCALE
mm	2:1

GENERAL TOLERANCES (UNLESS SPECIFIED)		
ANGULAR TOL	±	1.0 °
4 PLACES	±	
3 PLACES	±	
2 PLACES	±	0.05
1 PLACE	±	0.3
0 PLACES	±	0.5

DRAFT WHERE APPLICABLE MUST REMAIN WITHIN DIMENSIONS

CURRENT REV DESC: NOTES AND CABLE LIST UPDATED

EC NO: 736602
DRWN: RSCHIEBER 2023/01/24
CHK'D: RSILLER 2023/01/31
APPR: RSILLER 2023/01/31

INITIAL REVISION:
DRWN: JELIZAINCIN 2021/01/15
APPR: RSILLER 2022/10/14

THIRD ANGLE PROJECTION

DRAWING	SERIES
A3-SIZE	120400

molex

CSE U12 3-5P AC MA RA XM SE UNSH BK

PRODUCT CUSTOMER DRAWING

DOCUMENT NUMBER	DOC TYPE	DOC PART	REVISION
1204000260	PSD	000	A1

MATERIAL NUMBER	CUSTOMER	SHEET NUMBER
SEE SHEET 2	GENERAL MARKET	1 OF 2

PART LIST

MOLEX NO.	ENGINEERING NO.	LENGHT (MM)
1204000236	Y03007E03M010	1000
1204000237	Y03007E03M020	2000
1204000238	Y03007E03M050	5000
1204000239	Y03007E03M100	10000
1204000240	Y03007B30M010	1000
1204000241	Y03007B30M020	2000
1204000242	Y03007B30M050	5000
1204000243	Y03007B30M100	10000
1204000244	Y03007H09M010	1000
1204000245	Y03007H09M020	2000
1204000246	Y03007H09M050	5000
1204000247	Y03007H09M100	10000
1204000248	Y04007E03M010	1000
1204000249	Y04007E03M020	2000
1204000250	Y04007E03M050	5000
1204000251	Y04007E03M100	10000
1204000252	Y04007B30M010	1000
1204000253	Y04007B30M020	2000
1204000254	Y04007B30M050	5000
1204000255	Y04007B30M100	10000
1204000256	Y04007H09M010	1000
1204000257	Y04007H09M020	2000
1204000258	Y04007H09M050	5000

MOLEX NO.	ENGINEERING NO.	LENGHT (MM)
1204000259	Y04007H09M100	10000
1204000260	Y05007E03M010	1000
1204000261	Y05007E03M020	2000
1204000262	Y05007E03M050	5000
1204000263	Y05007E03M100	10000
1204000264	Y05007B30M010	1000
1204000265	Y05007B30M020	2000
1204000266	Y05007B30M050	5000
1204000267	Y05007B30M100	10000
1204000268	Y05007H09M010	1000
1204000269	Y05007H09M020	2000
1204000270	Y05007H09M050	5000
1204000271	Y05007H09M100	10000

MOLEX NO.	ENGINEERING NO.	LENGHT (MM)

CABLE LIST

3P	4P	5P	CABLE TYPE	DESCRIPTION	MATERIAL	FINISH/COLOR	FIXED INSTALLATION *		FLEXIBLE INSTALLATION **		DRAG CHAIN	
							MIN.	MAX.	MIN.	MAX.	MIN.	MAX.
X			E03	CABLE PVC, BLK 3X0.34MM D4.9	PVC	BLACK	-30°C	+80°C	-10°C	+80°C	NOT SUITABLE	
	X			CABLE PVC, BLK 4X0.34MM D5.4								
		X		CABLE PVC, BLK 5X0.34MM(UL/CSA) D5.8								
X			B30	CABLE 3X0.34 TPU BK D4.80 TPE UNSH DCS	PUR WSOR	BLACK	-40°C	+90°C	-25°C	+80°C	-5°C	+60°C
	X			CABLE 4X0.34 TPU BK D5.10 TPE UNSH DCS								
		X		CABLE 5X0.34 TPU BK D5.50 TPE UNSH DCS								
X			H09	CABLE PUR;BLK 3X0.34MM-LSOH;UL D4.4	PUR-LS0H	BLACK	-40°C	+80°C	-25°C	+80°C	+5°C	+60°C
	X			CABLE PUR;BLK 4X0.34MM-LSOH;UL D4.7								
		X		CABLE PUR BLK 5X0.34MM LSZH UL D5.0								

* FIXED POSITION WITHOUT ACCIDENTAL CRUSHING OF VIBRATION.
** FREE MOTION WITHOUT PERIODIC RECURRENCE OR FORCED GUIDANCE.

CABLE LENGTH TOLERANCES	
LENGTH	TOLERANCE
0m-1m	+40 mm
>1m-5m	+60 mm
>5m-10m	+80 mm
>10m-20m	+140 mm
>20m-30m	+160 mm
>30m	+1% length

BILL OF MATERIAL:

3P	4P	5P	ITEM	QTY	DESCRIPTION	MATERIAL	FINISH/COLOR
X	X	X	1	-	CABLE	SEE CABLE LIST	SEE CABLE LIST
X	X	X	2	3/4/5	CONTACT 10 MA STA AU	COPPER ALLOY	GOLD OVER NICKEL PLATED
X			3	1	PLG U12 3P AC MA PA UNSH WT	-	-
	X				PLG U12 4P AC MA PA UNSH WT		
		X			PLG U12 5P AC MA PA UNSH WT		
X	X	X	4	1	OVERMOLD	TPC	SEE MATRIX
IF "H" IS IN MATRIX-END			-	2	I/D CARRIER DIA 4-7MMX30MM	PVC	TRANSPARENT

DOCUMENT STATUS	P1	RELEASE DATE	2023/01/31 08:21:33

FUNCTIONAL SYMBOLS: FA = 0, FC = 0, FP = 0
DIVISIONAL SYMBOLS

THIS DRAWING CONTAINS INFORMATION THAT IS PROPRIETARY TO MOLEX ELECTRONIC TECHNOLOGIES, LLC AND SHOULD NOT BE USED WITHOUT WRITTEN PERMISSION

DIMENSION UNITS	SCALE
mm	1:1

GENERAL TOLERANCES (UNLESS SPECIFIED)

ANGULAR TOL	±	1.0 °
4 PLACES	±	
3 PLACES	±	
2 PLACES	±	0.05
1 PLACE	±	0.3
0 PLACES	±	0.5

DRAFT WHERE APPLICABLE MUST REMAIN WITHIN DIMENSIONS

CURRENT REV DESC: NOTES AND CABLE LIST UPDATED

EC NO: 736602
DRWN: RSCHIEBER 2023/01/24
CHK'D: RSILLER 2023/01/31
APPR: RSILLER 2023/01/31

INITIAL REVISION:
DRWN: JELIZAINCIN 2021/01/15
APPR: RSILLER 2022/10/14

THIRD ANGLE PROJECTION | DRAWING: A3-SIZE | SERIES: 120400

molex

CSE U12 3-5P AC MA RA XM SE UNSH BK

PRODUCT CUSTOMER DRAWING

DOCUMENT NUMBER	DOC TYPE	DOC PART	REVISION
1204000260	PSD	000	A1

MATERIAL NUMBER	CUSTOMER	SHEET NUMBER
SEE PART LIST	GENERAL MARKET	2 OF 2

FORMAT: master-sized-A3
REVISION: J
DATE: 2020/01/16