3P M12 FEMALE

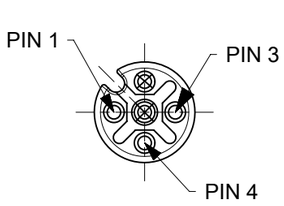

PIN	WIRE COLOR
1	BN
2	-
3	BU
4	BK
5	-

4P M12 FEMALE

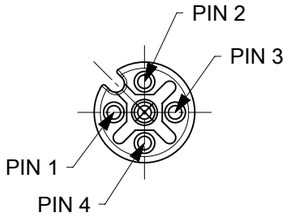

PIN	WIRE COLOR
1	BN
2	WH
3	BU
4	BK
5	-

5P M12 FEMALE

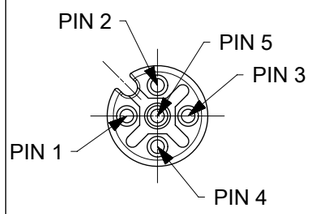

PIN	WIRE COLOR
1	BN
2	WH
3	BU
4	BK
5	GY

CODING ACCORDING TO IEC 61076-2-101

3P M12 MALE

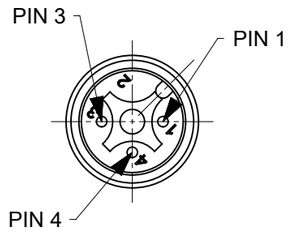

PIN	WIRE COLOR
1	BN
2	-
3	BU
4	BK
5	-

4P M12 MALE

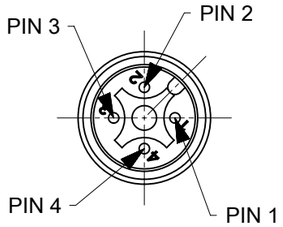

PIN	WIRE COLOR
1	BN
2	WH
3	BU
4	BK
5	-

5P M12 MALE

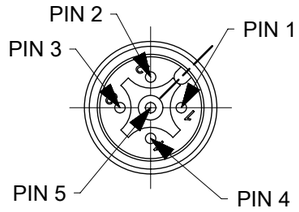

PIN	WIRE COLOR
1	BN
2	WH
3	BU
4	BK
5	GY

CODING ACCORDING TO IEC 61076-2-101

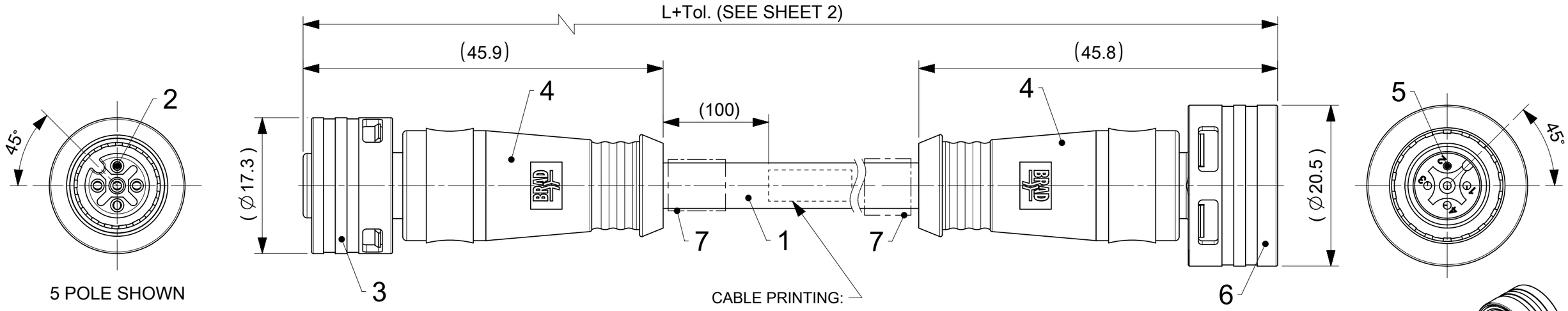

CABLE PRINTING:
"MOLEX" "MOLEX P/N" "ENGINEERING NO." "MX CALENDAR YEAR CALENDAR WEEK"
SECOND PRINT 300mm. AWAY
FOR EXAMPLE : MOLEX 1204010001 YY4030E03M010 MX2038

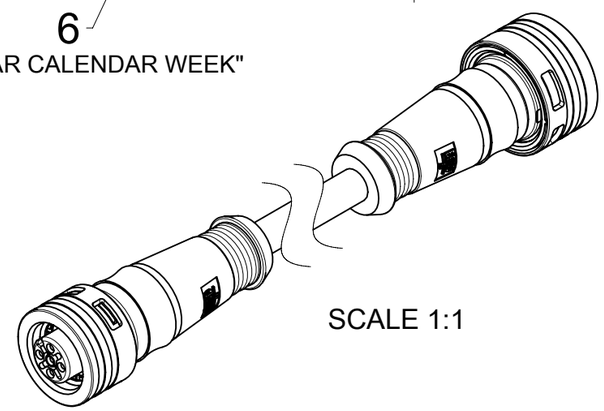

SCALE 1:1

NOTES:
1. PARTS ACC. TO PRODUCT SPECIFICATION 1204000001 PS P10 AND IN STYLE OF IEC-61076-2-010
2. BOM & PART LIST - SEE SHEET 2
3. RATED VOLTAGE :
   3, 4 CONTACTS: 250V AC OR DC
   5 CONTACTS: 60V AC OR DC
   RATED CURRENT:
   3, 4, 5 CONTACTS: 4A, DERATING HAS TO BE CONSIDERED
   OVERVOLTAGE CATEGORY: 3
   POLLUTION DEGREE: 3, ONLY IN MATED AND LOCKED CONDITION
4. PROTECTION CLASS: IP 67, ONLY IN MATED AND LOCKED CONDITION
5. TEMPERATURE RANGE:
   TEMPERATURE PLUG/SOCKET: -40 °C TO +85 °C
   TEMPERATURE CABLE: SEE CABLE LIST
6. MECHANICAL OPERATIONS: 100 CYCLES
7. MATES WITH ULTRA-LOCK M12 RECEPTACLES
8. PACKAGING: THE CORDSETS ARE SINGLE PACKED IN PLASTIC BAGS AND DELIVERED IN CARTON BOXES
9. UL CSA FILE REGISTRATION PENDING

DOCUMENT STATUS	P1	RELEASE DATE	2023/01/31 08:21:04

THIS DRAWING CONTAINS INFORMATION THAT IS PROPRIETARY TO MOLEX ELECTRONIC TECHNOLOGIES, LLC AND SHOULD NOT BE USED WITHOUT WRITTEN PERMISSION

FUNCTIONAL SYMBOLS: FA = 0, FC = 0, FP = 0
DIVISIONAL SYMBOLS

DIMENSION UNITS	SCALE
mm	2:1

GENERAL TOLERANCES (UNLESS SPECIFIED)

ANGULAR TOL	±	1.0 °
4 PLACES	±	
3 PLACES	±	
2 PLACES	±	0.05
1 PLACE	±	0.3
0 PLACES	±	0.5

DRAFT WHERE APPLICABLE MUST REMAIN WITHIN DIMENSIONS

CURRENT REV DESC: NOTES AND CABLE LIST UPDATED

EC NO: 736602
DRWN: RSCHIEBER 2023/01/26
CHK'D: RSILLER 2023/01/31
APPR: RSILLER 2023/01/31

INITIAL REVISION:
DRWN: MDHARMANTI 2021/03/12
APPR: RSILLER 2022/10/14

THIRD ANGLE PROJECTION | DRAWING: A3-SIZE | SERIES: 120401

molex

CSE U12 4-5P AC FE MA STR XM DE UNSH BK

PRODUCT CUSTOMER DRAWING

DOCUMENT NUMBER	DOC TYPE	DOC PART	REVISION
1204010001	PSD	000	A1

MATERIAL NUMBER	CUSTOMER	SHEET NUMBER
SEE SHEET 2	GENERAL MARKET	1 OF 2

FORMAT: master-Sized-A3
REVISION: J
DATE: 2020/01/14

PART No MATRIX

Y	Y	X	0	3	0	X	X	X	X	X	X	X	X	X

OPTIONS

YY= ULTRA LOCK 2.0 DOUBLE ENDED

POLES:
3 = 3 POLES
4 = 4 POLES
5 = 5 POLES

HEADER :
030= FEMALE STRAIGHT
- MALE STRAIGHT

CABLE:
E03 - 3/4/5x0.34 PVC BLACK
B30 - 3/4/5x0.34 WSOR BLACK
H09 - 3/4/5x0.34 PUR-LS0H BLACK

UNIT:
M = METER
F = FEET
C = CENTIMETER
T = 10M

LENGTH:
EXAMPLE:
010 = 1 m
050 = 5 m
100 = 10 m

OVERMOLD:
BLANK = STANDARD BRAD:
-YELLOW IN THE USA
-BLACK IN EUROPE
A = GREY
E = RED
G = BLACK
Y = YELLOW
H = STD. COLOUR WITH TWO ID-TAG CARRIERS

CABLE LENGTH TOLERANCES	
LENGTH	TOLERANCE
0m-1m	+40 mm
>1m-5m	+60 mm
>5m-10m	+80 mm
>10m-20m	+140 mm
>20m-30m	+160 mm
>30m	+1% length

CABLE LIST

3P	4P	5P	CABLE TYPE	DESCRIPTION	MATERIAL	FINISH/COLOR	FIXED INSTALLATION *		FLEXIBLE INSTALLATION **		DRAG CHAIN	
							MIN.	MAX.	MIN.	MAX.	MIN.	MAX.
X			E03	CABLE PVC, BLK 3X0.34MM D4.9	PVC	BLACK	-30°C	+80°C	-10°C	+80°C	NOT SUITABLE	
	X			CABLE PVC, BLK 4X0.34MM D5.4								
		X		CABLE PVC, BLK 5X0.34MM(UL/CSA) D5.8								
X			B30	CABLE 3X0.34 TPU BK D4.80 TPE UNSH DCS	PUR WSOR	BLACK	-40°C	+90°C	-25°C	+80°C	-5°C	+60°C
	X			CABLE 4X0.34 TPU BK D5.10 TPE UNSH DCS								
		X		CABLE 5X0.34 TPU BK D5.50 TPE UNSH DCS								
X			H09	CABLE PUR;BLK 3X0.34MM-LSOH;UL D4.4	PUR-LS0H	BLACK	-40°C	+80°C	-25°C	+80°C	+5°C	+60°C
	X			CABLE PUR;BLK 4X0.34MM-LSOH;UL D4.7								
		X		CABLE PUR BLK 5X0.34MM LSZH UL D5.0								

* FIXED POSITION WITHOUT ACCIDENTAL CRUSHING OF VIBRATION.
** FREE MOTION WITHOUT PERIODIC RECURRENCE OR FORCED GUIDANCE.

PART LIST

MOLEX NO.	ENGINEERING NO.	LENGHT (MM)
1204010001	YY4030E03M010	1000
1204010002	YY4030E03M020	2000
1204010003	YY4030E03M050	5000
1204010004	YY4030E03M100	10000
1204010005	YY4030B30M010	1000
1204010006	YY4030B30M020	2000
1204010007	YY4030B30M050	5000
1204010008	YY4030B30M100	10000
1204010009	YY4030H09M010	1000
1204010010	YY4030H09M020	2000
1204010011	YY4030H09M050	5000
1204010012	YY4030H09M100	10000
1204010013	YY5030E03M010	1000
1204010014	YY5030E03M020	2000
1204010015	YY5030E03M050	5000
1204010016	YY5030E03M100	10000
1204010017	YY5030B30M010	1000
1204010018	YY5030B30M020	2000
1204010019	YY5030B30M050	5000
1204010020	YY5030B30M100	10000
1204010021	YY5030H09M010	1000
1204010022	YY5030H09M020	2000
1204010023	YY5030H09M050	5000
1204010024	YY5030H09M100	10000

BILL OF MATERIAL

3P	4P	5P	ITEM	QTY	DESCRIPTION	MATERIAL	FINISH/COLOR
X	X	X	1	-	CABLE	SEE CABLE LIST	SEE CABLE LIST
X	X	X	2	3/4/5	CONTACT 10 FE STA AU	BRASS	GOLD OVER NICKEL PLATED
X			3	1	PLG U12 3P AC FE PA UNSH	-	-
	X				PLG U12 4P AC FE PA UNSH		
		X			PLG U12 5P AC FE PA UNSH		
X	X	X	4	2	OVERMOLD	TPC	SEE MATRIX
X	X	X	5	3/4/5	CONTACT 10 MA STA AU	COPPER ALLOY	GOLD OVER NICKEL PLATED
X			6	1	PLG U12 3P AC MA PA UNSH WT	-	-
	X				PLG U12 4P AC MA PA UNSH WT		
		X			PLG U12 5P AC MA PA UNSH WT		
IF "H" IS IN MATRIX-END			7	2	I/D CARRIER DIA 4-7MMX30MM	PVC	TRANSPARENT

DOCUMENT STATUS	P1	RELEASE DATE	2023/01/31 08:21:04

THIS DRAWING CONTAINS INFORMATION THAT IS PROPRIETARY TO MOLEX ELECTRONIC TECHNOLOGIES, LLC AND SHOULD NOT BE USED WITHOUT WRITTEN PERMISSION

FUNCTIONAL SYMBOLS: FA = 0, FC = 0, FP = 0
DIVISIONAL SYMBOLS

DIMENSION UNITS: mm
SCALE: 2:1
GENERAL TOLERANCES (UNLESS SPECIFIED)
ANGULAR TOL ± 1.0 °
4 PLACES ±
3 PLACES ±
2 PLACES ± 0.05
1 PLACE ± 0.3
0 PLACES ± 0.5
DRAFT WHERE APPLICABLE MUST REMAIN WITHIN DIMENSIONS

CURRENT REV DESC: NOTES AND CABLE LIST UPDATED

EC NO: 736602
DRWN: RSCHIEBER 2023/01/26
CHK'D: RSILLER 2023/01/31
APPR: RSILLER 2023/01/31
INITIAL REVISION:
DRWN: MDHARMANTI 2021/03/12
APPR: RSILLER 2022/10/14

molex

CSE U12 4-5P AC FE MA STR XM DE UNSH BK

PRODUCT CUSTOMER DRAWING

THIRD ANGLE PROJECTION	DRAWING	SERIES	MATERIAL NUMBER	CUSTOMER	SHEET NUMBER
	A3-SIZE	120401	SEE PART LIST	GENERAL MARKET	2 OF 2

DOCUMENT NUMBER	DOC TYPE	DOC PART	REVISION
1204010001	PSD	000	A1

FORMAT: molex_tb_tpl_A3
REVISION: J
DATE: 2020/01/14