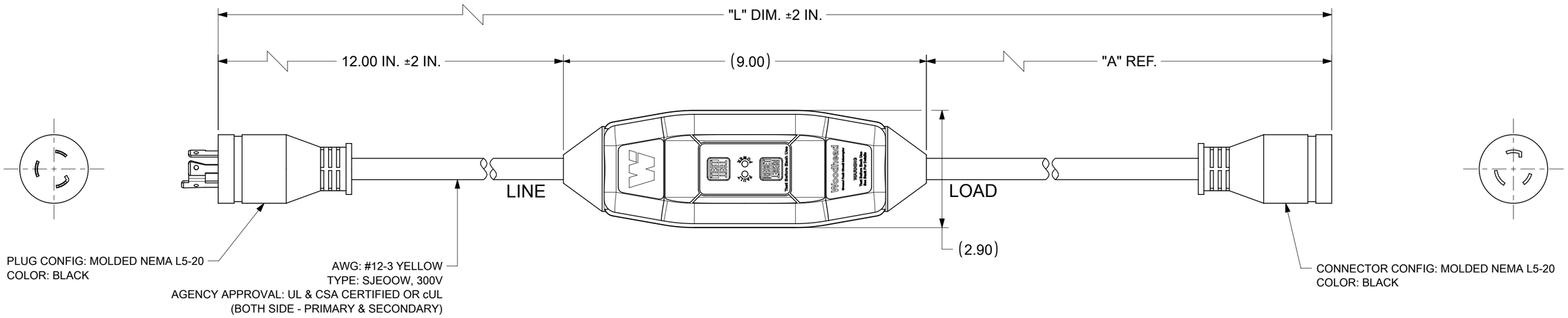

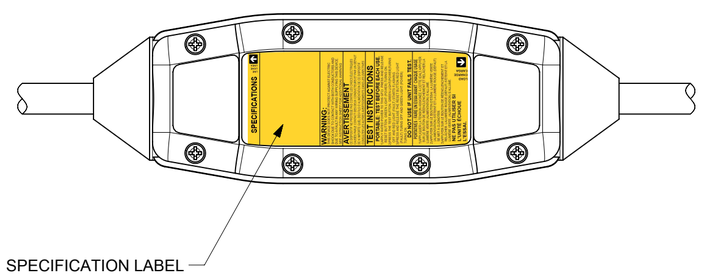

TECHNICAL

AGENCY APPROVAL:	cULus
RATED SUPPLY VOLTAGE:	120 VAC
RATED CURRENT:	UP TO 20 AMPS
RESET TYPE:	AUTO/MANUAL
OPERATING FREQUENCY:	60 Hz
TYPE:	CLASS A
GROUND TRIP CURRENT:	5mA +/- 1mA
OVERLOAD CURRENT:	120 AMPS, 50% INDUCTIVE
INSULATION VOLTAGE:	1,500 VRMS - 1 MINUTE
ENDURANCE OPERATIONS:	3000 OPERATIONS
ENCLOSURE:	TYPE 4X, IP69, IP69K

MATERIAL NO.	PART NO.	"L" DIMENSION	"A" DIMENSION	POWER-UP
1301530114	20051-1MLDA	2 FT 9 IN	1 FT	AUTO
1301530115	20051-1MLDM	2 FT 9 IN	1 FT	MANUAL

THIS DRAWING CONTAINS INFORMATION THAT IS PROPRIETARY TO MOLEX ELECTRONIC TECHNOLOGIES, LLC AND SHOULD NOT BE USED WITHOUT WRITTEN PERMISSION

FUNCTIONAL SYMBOLS: FA = 0, FC = 0, FP = 0
DIVISIONAL SYMBOLS

DIMENSION UNITS	SCALE
INCH	NTS

GENERAL TOLERANCES (UNLESS SPECIFIED)

ANGULAR TOL	±	°
4 PLACES	±	
3 PLACES	±	
2 PLACES	±	
1 PLACE	±	
0 PLACES	±	

DRAFT WHERE APPLICABLE MUST REMAIN WITHIN DIMENSIONS

CURRENT REV DESC: NEW SALES DRAWING CREATED

EC NO: 727155
DRWN: VBASUTHKARP 2022/11/03
CHK'D: DNGUYEN62 2022/12/16
APPR: WLEUNG 2022/12/29

INITIAL REVISION:
DRWN: VBASUTHKARP 2022/11/03
APPR: WLEUNG 2022/12/29

molex

INLINE GFCI 20A, 120V
W/ MOLDED PLUG/CONNECTOR L5-20

PRODUCT CUSTOMER DRAWING

DOCUMENT NUMBER	DOC TYPE	DOC PART	REVISION
1301530114	PSD	000	A

THIRD ANGLE PROJECTION	DRAWING	SERIES	MATERIAL NUMBER	CUSTOMER	SHEET NUMBER
	C-SIZE	130153	SEE TABLE	GENERAL MARKET	1 OF 1

DOCUMENT STATUS	P1	RELEASE DATE	2022/12/29 18:41:02

FORMAT: master-tb-prod-C
REVISION: J
DATE: 2020/01/14