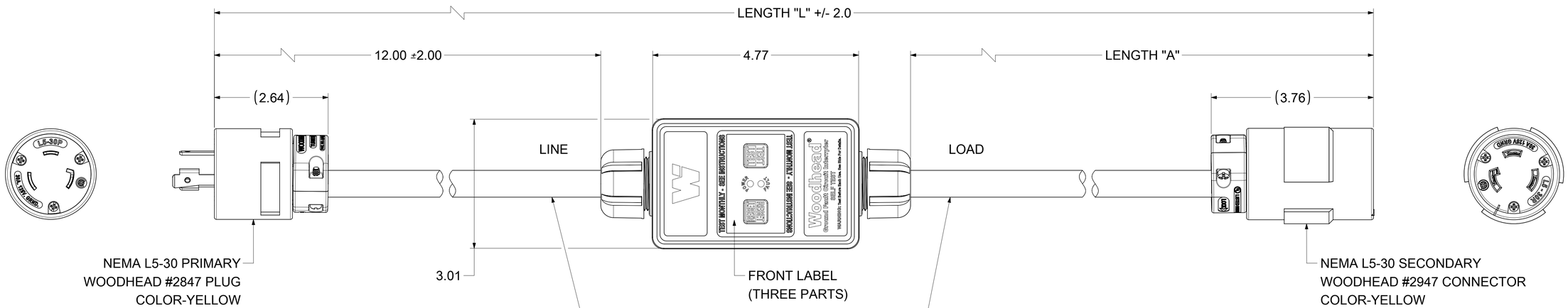

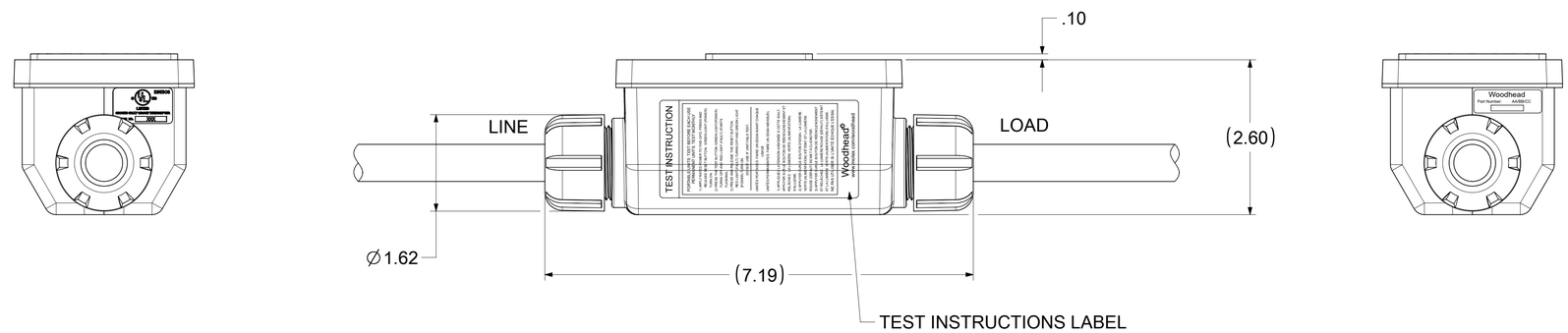

MATERIAL NO.	ENGINEERING NO.	LENGTH "L"	LENGTH "A"	POWER-UP
1301530164	30051-1A	2 FT 9.4 IN.	1 FT	AUTO
1301530171	30051-6A	7 FT 9.4 IN.	6 FT	AUTO
1301530168	30051-25A	26 FT 9.4 IN.	25 FT	AUTO
1301530165	30051-1M	2 FT 9.4 IN.	1 FT	MANUAL
1301530172	30051-6M	7 FT 9.4 IN.	6 FT	MANUAL
1301530169	30051-25M	26 FT 9.4 IN.	25 FT	MANUAL

TECHNICAL

LISTED:	cULus
RATED SUPPLY VOLTAGE:	120VAC
RATED CURRENT:	UP TO 30 AMPS
RESET TYPE:	AUTOMATIC OR MANUAL
OPERATING FREQUENCY:	60 Hz
TYPE:	CLASS A
GROUND TRIP CURRENT:	5mA +/- 1mA
PHASE	SINGLE PHASE
OVERLOAD CURRENT:	180 AMPS, 0.45PF
INSULATION VOLTAGE:	1,500 VRMS - 1 MINUTE
ENDURANCE OPERATIONS:	3000 OPERATIONS
ENCLOSURE:	TYPE 4X, IP69K (SINGLE PHASE)

THIS DRAWING CONTAINS INFORMATION THAT IS PROPRIETARY TO MOLEX ELECTRONIC TECHNOLOGIES, LLC AND SHOULD NOT BE USED WITHOUT WRITTEN PERMISSION

FUNCTIONAL SYMBOLS: FA = 0, FC = 0, FP = 0

DIVISIONAL SYMBOLS

DIMENSION UNITS	SCALE
INCH	NTS

GENERAL TOLERANCES (UNLESS SPECIFIED)

ANGULAR TOL	± °
4 PLACES	±
3 PLACES	±
2 PLACES	±
1 PLACE	±
0 PLACES	±

DRAFT WHERE APPLICABLE MUST REMAIN WITHIN DIMENSIONS

CURRENT REV DESC: UPDATED GFCI BODY

EC NO: 788654
DRWN: PPURSUTANDEL 2024/05/30
CHK'D: DNGUYEN62 2024/06/11
APPR: HKNEELAND 2024/06/13

INITIAL REVISION:
DRWN: PPURSUTANDEL 2021/07/01
APPR: HKNEELAND 2021/07/30

molex

30A/120V GFCI AUTO 2 FT.
SUPER-SAFEWAY NEMA L5

PRODUCT CUSTOMER DRAWING

DOCUMENT NUMBER	DOC TYPE	DOC PART	REVISION
1301530164	PSD	000	B

THIRD ANGLE PROJECTION | DRAWING: D-SIZE | SERIES: 130153 | MATERIAL NUMBER: SEE TABLE | CUSTOMER: GENERAL MARKET | SHEET NUMBER: 1 OF 1

DOCUMENT STATUS	P1	RELEASE DATE	2024/06/13 17:03:32

TEMPLATE: TEMPLATE-SHEET
REVISION: J
DATE: 2024/01/10