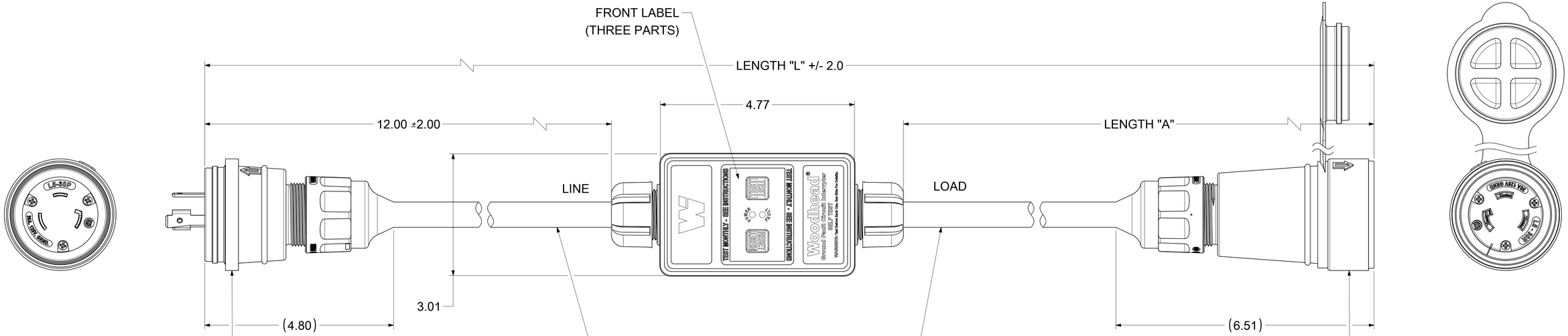


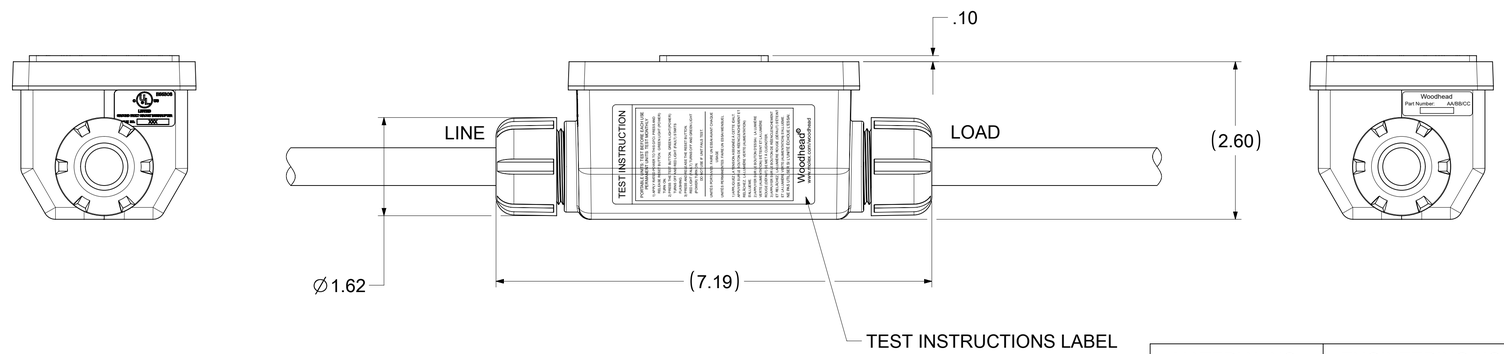


| MATERIAL NO. | ENGINEERING NO. | LENGTH "L" | LENGTH "A" | POWER-UP |
|---|---|---|---|---|
| 1301530174 | 30052-1A | 2 FT 9.4 IN. | 1 FT | AUTO |
| 1301530179 | 30052-6A | 7 FT 9.4 IN. | 6 FT | AUTO |
| 1301530176 | 30052-25A | 26 FT 9.4 IN. | 25 FT | AUTO |
| 1301530175 | 30052-1M | 2 FT 9.4 IN. | 1 FT | MANUAL |
| 1301530180 | 30052-6M | 7 FT 9.4 IN. | 6 FT | MANUAL |
| 1301530177 | 30052-25M | 26 FT 9.4 IN. | 25 FT | MANUAL |

TECHNICAL

| | |
|---|---|
| LISTED: | cULus |
| RATED SUPPLY VOLTAGE: | 120VAC |
| RATED CURRENT: | UP TO 30 AMPS |
| RESET TYPE: | AUTOMATIC OR MANUAL |
| OPERATING FREQUENCY: | 60 Hz |
| TYPE: | CLASS A |
| GROUND TRIP CURRENT: | 5mA +/- 1mA |
| PHASE | SINGLE PHASE |
| OVERLOAD CURRENT: | 180 AMPS, 0.45PF |
| INSULATION VOLTAGE: | 1,500 VRMS - 1 MINUTE |
| ENDURANCE OPERATIONS: | 3000 OPERATIONS |
| ENCLOSURE: | TYPE 4X, IP69K (SINGLE PHASE) |

THIS DRAWING CONTAINS INFORMATION THAT IS PROPRIETARY TO MOLEX ELECTRONIC TECHNOLOGIES, LLC AND SHOULD NOT BE USED WITHOUT WRITTEN PERMISSION

FUNCTIONAL SYMBOLS: FA = 0, FC = 0, FP = 0

DIVISIONAL SYMBOLS

| DIMENSION UNITS | SCALE |
|---|---|
| INCH | NTS |

GENERAL TOLERANCES (UNLESS SPECIFIED)

| | |
|---|---|
| ANGULAR TOL | ± ° |
| 4 PLACES | ± |
| 3 PLACES | ± |
| 2 PLACES | ± |
| 1 PLACE | ± |
| 0 PLACES | ± |

DRAFT WHERE APPLICABLE MUST REMAIN WITHIN DIMENSIONS

CURRENT REV DESC: UPDATED GFCI BODY

EC NO: 788654
DRWN: PPURSUTANDEL 2024/05/30
CHK'D: DNGUYEN62 2024/06/12
APPR: HKNEELAND 2024/06/13

INITIAL REVISION:
DRWN: PPURSUTANDEL 2021/07/01
APPR: HKNEELAND 2021/07/30

molex

30A/120V GFCI AUTO 2FT.
WATERTITE NEMA L5-30

PRODUCT CUSTOMER DRAWING

| DOCUMENT NUMBER | DOC TYPE | DOC PART | REVISION |
|---|---|---|---|
| 1301530174 | PSD | 000 | B |

| THIRD ANGLE PROJECTION | DRAWING | SERIES | MATERIAL NUMBER | CUSTOMER | SHEET NUMBER |
|---|---|---|---|---|---|
| | D-SIZE | 130153 | SEE TABLE | GENERAL MARKET | 1 OF 1 |

| DOCUMENT STATUS | P1 | RELEASE DATE | 2024/06/13 | 17:03:33 |
|---|---|---|---|---|