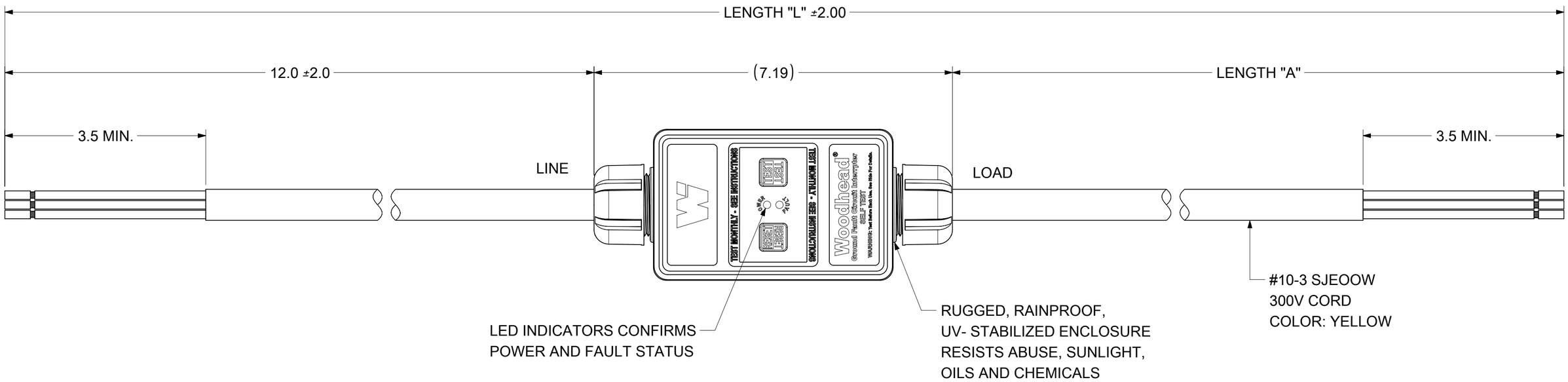

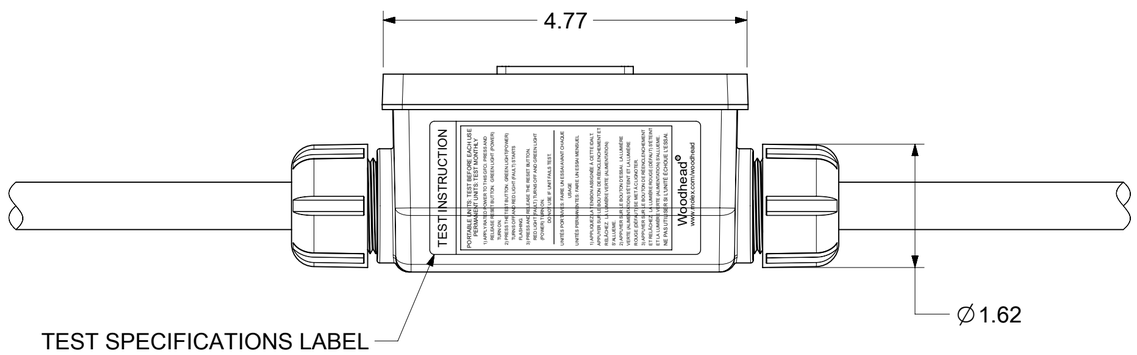

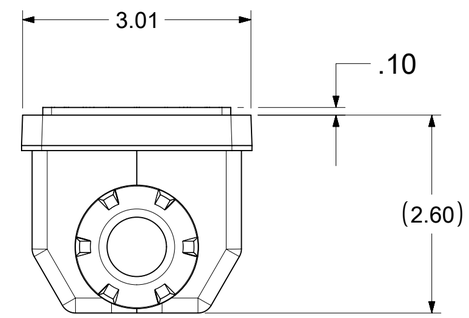

MATERIAL NUMBER	PART NUMBER	LENGTH "L"	LENGTH "A"	POWER-UP	RATED VOLTAGE
1301530261	30051-0A	2 FT 9.4 IN	1 FT	AUTO	120VAC
1301530262	30051-0M	2 FT 9.4 IN	1 FT	MANUAL	120VAC
1301530181	30053-0A	2 FT 9.4 IN	1 FT	AUTO	240VAC
1301530182	30053-0M	2 FT 9.4 IN	1 FT	MANUAL	240VAC

TECHNICAL

LISTED:	cULus
RATED SUPPLY VOLTAGE:	120/240VAC
RATED CURRENT:	UP TO 30 AMPS
RESET TYPE:	AUTOMATIC OR MANUAL
OPERATING FREQUENCY:	60 Hz
TYPE:	CLASS A
GROUND TRIP CURRENT:	5mA +/- 1mA
PHASE	SINGLE PHASE
OVERLOAD CURRENT:	180 AMPS, 0.45PF
INSULATION VOLTAGE:	1,500 VRMS - 1 MINUTE
ENDURANCE OPERATIONS:	3000 OPERATIONS
ENCLOSURE:	NEMA 4X, IP69K

FUNCTIONAL SYMBOLS
FA = 0
FC = 0
FP = 0
DIVISIONAL SYMBOLS

THIS DRAWING CONTAINS INFORMATION THAT IS PROPRIETARY TO MOLEX ELECTRONIC TECHNOLOGIES, LLC AND SHOULD NOT BE USED WITHOUT WRITTEN PERMISSION

DIMENSION UNITS	SCALE
INCH	NTS

GENERAL TOLERANCES (UNLESS SPECIFIED)

	MM	INCH
4 PLACES	±	±
3 PLACES	±	± 0.005
2 PLACES	± 0.13	± 0.01
1 PLACE	± 0.25	± 0.02
0 PLACES	±	±
ANGULAR TOL	± 0.5 °	

DRAFT WHERE APPLICABLE MUST REMAIN WITHIN DIMENSIONS

CURRENT REV DESC: UPDATED TO THE NEW GFCI VERSION. EXTENDED THE CORD CUT-OUT LENGTH TO 3.5 INCHES AND ADDED A WINDOW STRIP.

EC NO: 788654
DRWN: PPURSUTANDEL 2023/05/03
CHK'D: DNGUYEN62 2024/06/11
APPR: HKNEELAND 2024/06/13

INITIAL REVISION:
DRWN: HRUIZ01 2013/02/11
APPR: JFMURPHY 2014/08/02

THIRD ANGLE PROJECTION | DRAWING: C-SIZE | SERIES: 130153

molex

GFCI 30A, 120/240VAC INLINE FLYING LEADS

PRODUCT CUSTOMER DRAWING

DOCUMENT NUMBER	DOC TYPE	DOC PART	REVISION
SD-130153-035	PSD	001	C

MATERIAL NUMBER	CUSTOMER	SHEET NUMBER
SEE TABLE	GNEERAL MARKET	1 OF 1

DOCUMENT STATUS	P1	RELEASE DATE	2024/06/13 17:03:37

FORMAT: Eng-lega-master-tb-prod-C
REVISION: E
DATE: 2020/01/14