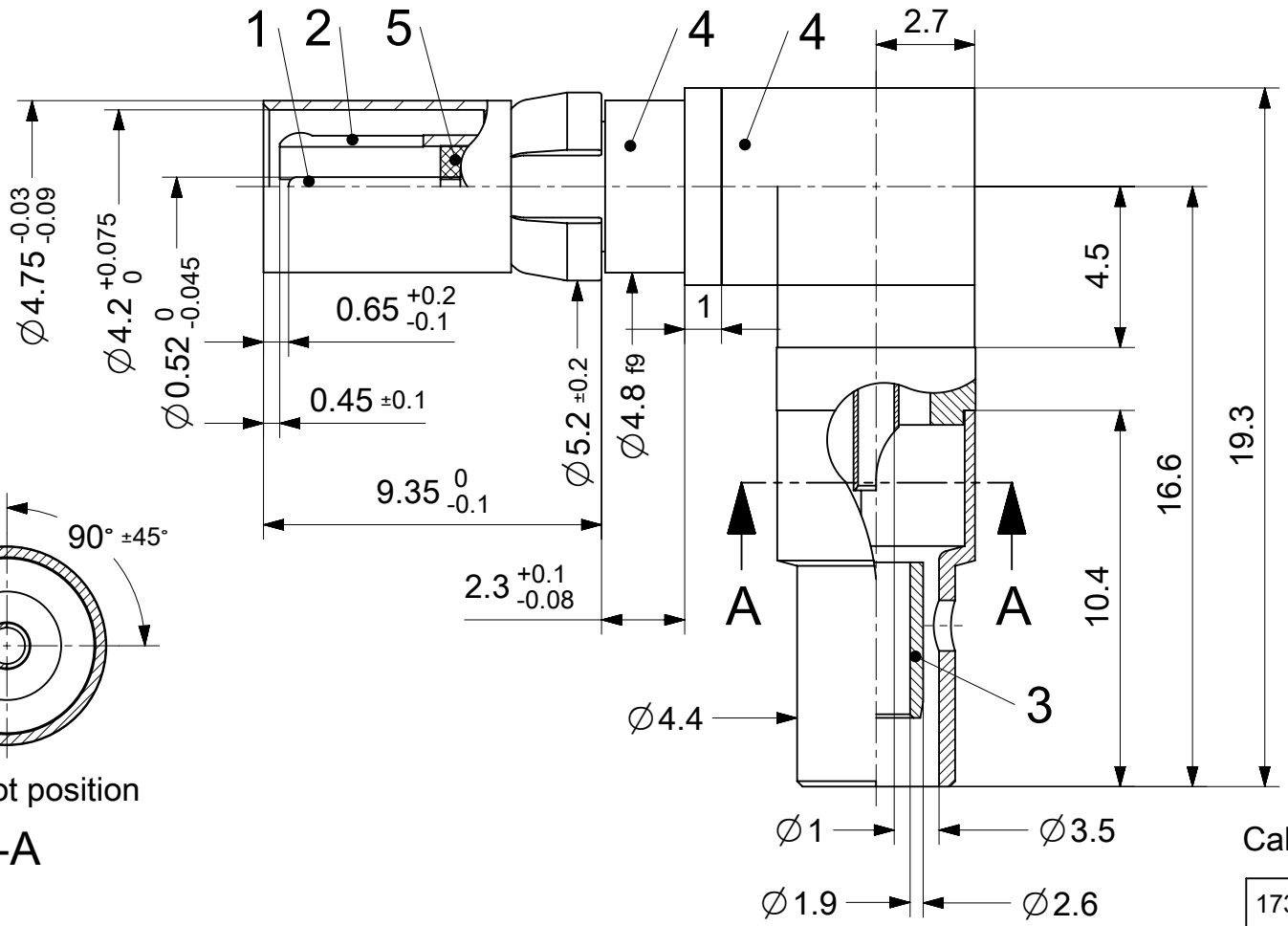

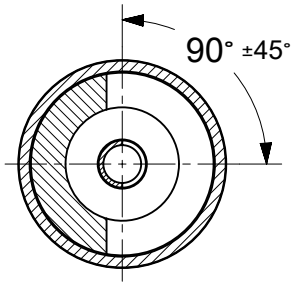

Solderpot position

A-A

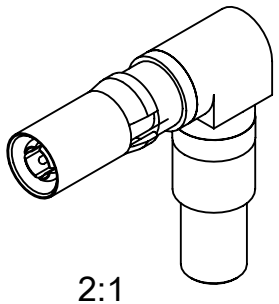

2:1

RoHS compliant
by exemption

Cable RG316U double shielded

1731120666	FDX022S102	102
Material Number	FCT Part Number	Material + Finish See extra sheet

Crimping tools:

Crimping of outer conductor:

Hand tool: M22520/5-01
Die: Y138P cavity B

Pneumatic crimp tool: HX23
(replacement for PH4001)

Extraction tool: DRK38

Cable trimming dimensions

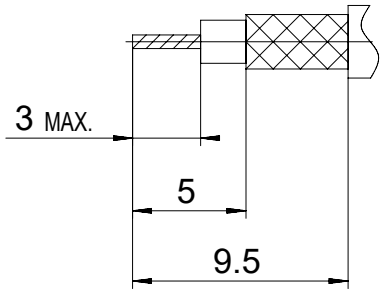

UNLESS OTHERWISE SPECIFIED DIMENSIONS FOR REFERENCE ONLY

REPLACEMENT FOR DOCUMENT NUMBER: FDX022S

THIS DRAWING CONTAINS INFORMATION THAT IS PROPRIETARY TO MOLEX ELECTRONIC TECHNOLOGIES, LLC AND SHOULD NOT BE USED WITHOUT WRITTEN PERMISSION

FUNCTIONAL SYMBOLS
FA = 0
FC = 0
FP = 0

DIVISIONAL SYMBOLS

DIMENSION UNITS	SCALE
mm	5:1

GENERAL TOLERANCES (UNLESS SPECIFIED)

ANGULAR TOL	± °
4 PLACES	±
3 PLACES	±
2 PLACES	±
1 PLACE	±
0 PLACES	±

DRAFT WHERE APPLICABLE MUST REMAIN WITHIN DIMENSIONS

CURRENT REV DESC:

EC NO: 712027
DRWN: VLOKESHA 2021/05/20
CHK'D: MTEUBEL 2022/06/29
APPR: MTEUBEL 2022/06/29

INITIAL REVISION:
DRWN: VLOKESHA 2021/05/20
APPR: MTEUBEL 2022/06/29

FIRST ANGLE PROJECTION

DRAWING: A4-SIZE
SERIES: 173112

molex

FCT 50 OHM COAXIAL CONTACT
FOR EN 60603-2

PRODUCT CUSTOMER DRAWING

DOCUMENT NUMBER	DOC TYPE	DOC PART	REVISION
1731120666	PSD	000	A

MATERIAL NUMBER	CUSTOMER	SHEET NUMBER
SEE TABLE	GENERAL MARKET	1 OF 1

DOCUMENT STATUS	P1	RELEASE DATE	2022/06/29 08:06:08

FORMAT: master-tb-prod-A4
REVISION: J
DATE: 2020/01/14