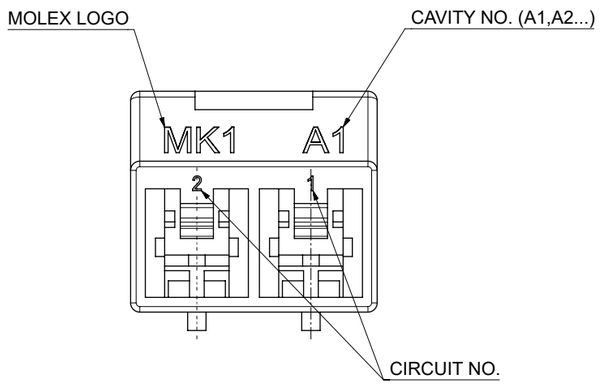

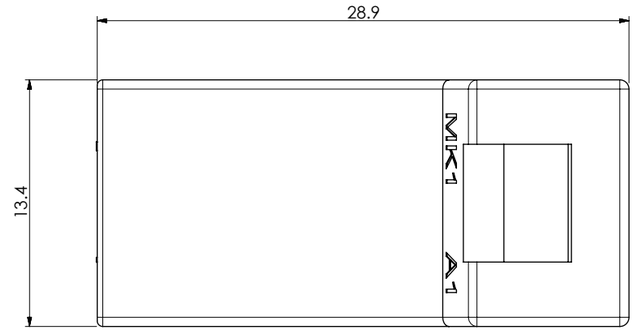

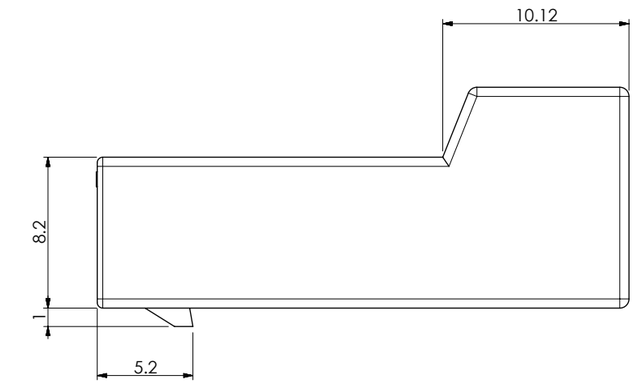

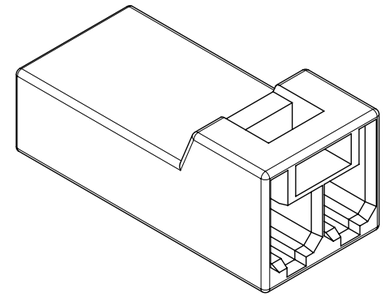

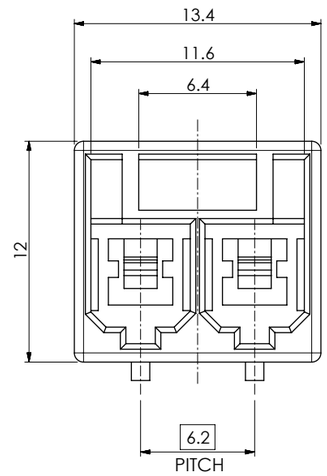

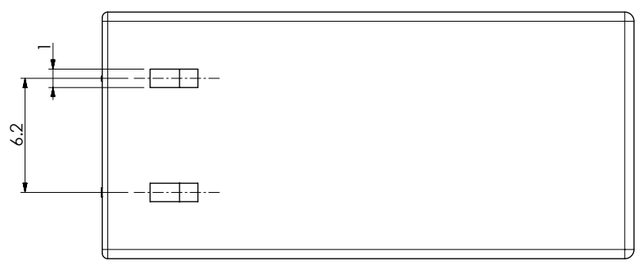

NOTES:
1. MATERIAL: NYLON(PA6) UNFILLED, UL94V-0,
COLOR: BLACK
2. APPLICATION TERMINAL: 217347 SERIES
3. APPLICATION TPA: 217347-0290
4. MATE WITH HOUSING: 217348-0200
5. PRODUCT SPECIFICATION: 2173470000PS
6. PACKAGING SPECIFICATION: 2173470000PK

DOCUMENT STATUS	P1	RELEASE DATE	2023/03/23 09:04:07

FORMAT: master-tb-prod-A3
REVISION: J1
DATE: 2021/05/01

FUNCTIONAL SYMBOLS
FA = 0
FC = 0
FD = 0
DIVISIONAL SYMBOLS

THIS DRAWING CONTAINS INFORMATION THAT IS PROPRIETARY TO MOLEX ELECTRONIC TECHNOLOGIES, LLC AND SHOULD NOT BE USED WITHOUT WRITTEN PERMISSION

DIMENSION UNITS	SCALE
mm	3:1

GENERAL TOLERANCES (UNLESS SPECIFIED)

ANGULAR TOL	±	°
4 PLACES	±	
3 PLACES	±	
2 PLACES	±	0.3
1 PLACE	±	0.3
0 PLACES	±	0.3

DRAFT WHERE APPLICABLE MUST REMAIN WITHIN DIMENSIONS

CURRENT REV DESC:

EC NO: 743246
DRWN: JDPARK01 2023/03/17
CHK'D: SCHONG03 2023/03/22
APPR: AIDA 2023/03/23

INITIAL REVISION:
DRWN: SCHONG03 2020/11/17
APPR: JBJIN 2021/10/28

THIRD ANGLE PROJECTION | DRAWING: A3-SIZE | SERIES: 217347

molex

HIGH TEMP VERSABLADE REC. HOUSING 2P

PRODUCT CUSTOMER DRAWING

DOCUMENT NUMBER	DOC TYPE	DOC PART	REVISION
2173470200	PSD	000	A2

MATERIAL NUMBER	CUSTOMER	SHEET NUMBER
2173470200	GENERAL	1 OF 1