# 220929 & 220930 SERIES RIGHT ANGLE WITH PULL TAB TYPE

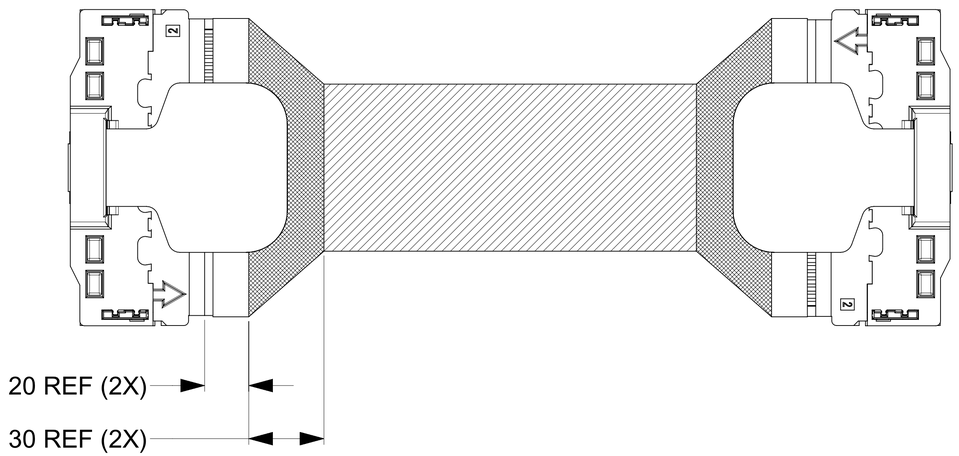


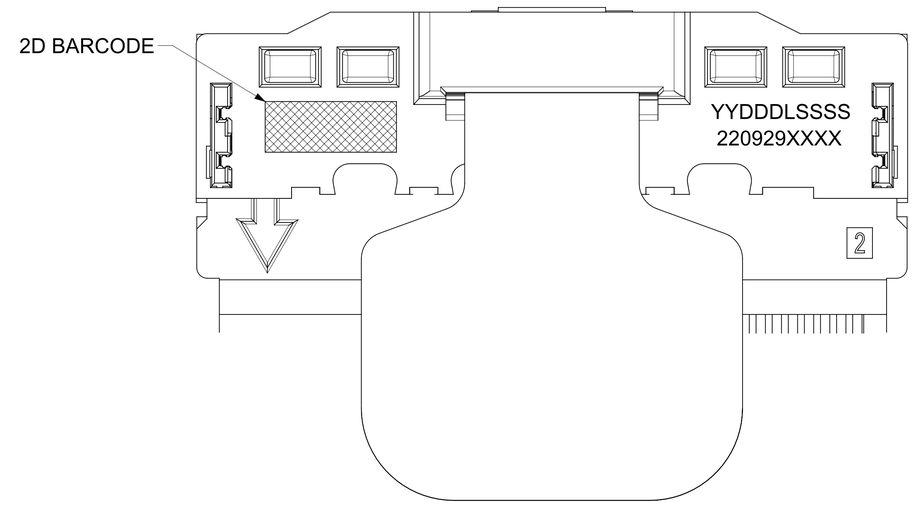


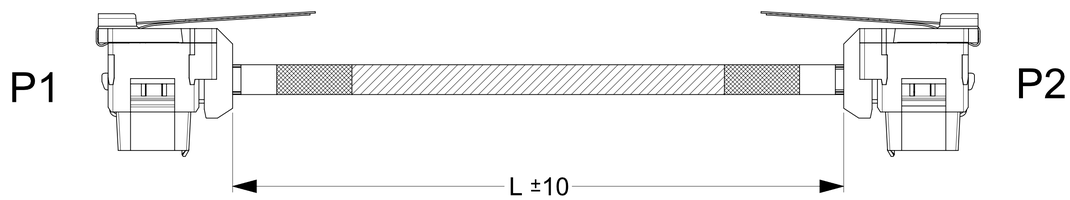


FORMAT: YY=YEAR DDD=JULIAN DATE
SSSS=SERIAL NO. FROM 0000-9999 AND WILL RESET EVERYDAY
L=PRODUCTION LINE CODE
220929XXXX IS THE PART NUMBER OF THE CABLE
ALL THE 2D BARCODE PN AND SN ARE PRINTED ON BOTH P1 AND P2 END
THIS FORMAT APPLIES TO ALL THE SERIES# CALLED OUT ON THIS DRAWING

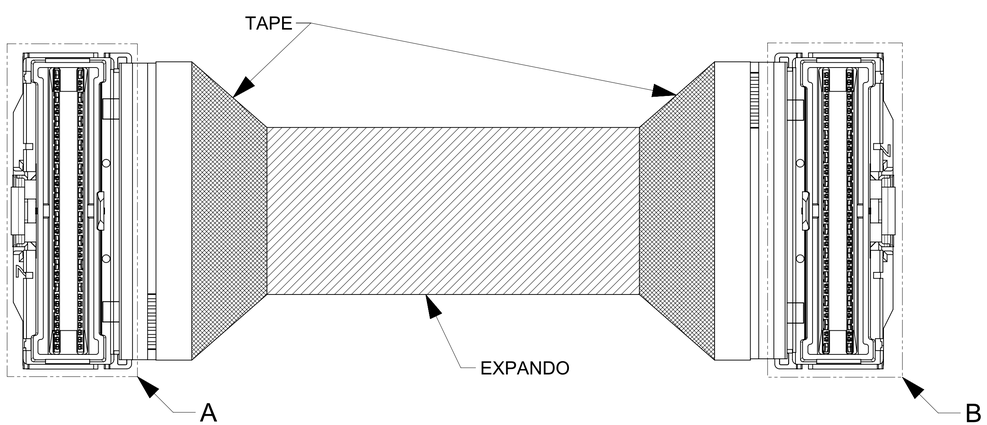


NOTES:
1. PRODUCT SPECIFICATION: 2080210001-PS
2. APPLICATION SPECIFICATION: 2080210001-AS
3. COSMETIC SPECIFICATION: PS-45499-002 CLASS B
4. MATES WITH: 2080211000 & 2080211100
5. HOUSING MATERIAL: LCP, GLASS FILLED, UL94V-0, COLOR: BLACK
6. CONTACT MATERIAL: HIGH PERFORMANCE COPPER ALLOY
7. PLATING: 0.76 MICRONS MIN. GOLD OVER NICKEL
(SELECTED GOLD IN CONTACT AREA)

THIS DRAWING CONTAINS INFORMATION THAT IS PROPRIETARY TO MOLEX ELECTRONIC TECHNOLOGIES, LLC AND SHOULD NOT BE USED WITHOUT WRITTEN PERMISSION

| | | | |
|---|---|---|---|
| FUNCTIONAL SYMBOLS | DIMENSION UNITS: MM | SCALE: 4:1 | CURRENT REV DESC: Change Dust Cover |
| FA = 0 | GENERAL TOLERANCES (UNLESS SPECIFIED) | | |
| FC = 0 | ANGULAR TOL ± 0.5° | | |
| FP = 0 | 4 PLACES ± | | |
| DIVISIONAL SYMBOLS | 3 PLACES ± | | |
| | 2 PLACES ± | | STATUS: Design Approved |
| | 1 PLACE ± | | DRWN: Jia Ling Fan 2024-03-04 |
| | 0 PLACES ± | | CHK'D: Tony Tong 2024-03-15 |
| | DRAFT WHERE APPLICABLE MUST REMAIN WITHIN DIMENSIONS | | APPR: Benny (Xing Qiang) He 2024-03-15 |

molex

GENERAL MARKET NS PCIE CABLE

PRODUCT SALES DRAWING

| DOCUMENT NUMBER | DOC TYPE | DOC PART | REVISION |
|---|---|---|---|
| 2209291000 | PSD | 000 | A3 |

| THIRD ANGLE PROJECTION | DRAWING | SERIES | MATERIAL NUMBER | CUSTOMER | SHEET NUMBER |
|---|---|---|---|---|---|
| | D-SIZE | 220929 | SEE TABLE | | 1 OF 10 |

| P1 | | P2 | |
|---|---|---|---|
| CKT | | CKT | |
| 1 | GND | 45 | GND |
| 2 | S | 46 | S |
| 3 | S | 47 | S |
| 4 | GND | 48 | GND |
| 5 | S | 49 | S |
| 6 | S | 50 | S |
| 7 | GND | 51 | GND |
| 8 | S | 52 | S |
| 9 | S | 53 | S |
| 10 | GND | 54 | GND |
| 11 | S | 55 | S |
| 12 | S | 56 | S |
| 13 | GND | 57 | GND |
| 14 | S | 58 | S |
| 15 | S | 59 | S |
| 16 | GND | 60 | GND |
| 17 | S | 61 | S |
| 18 | S | 62 | S |
| 19 | GND | 63 | GND |
| 20 | S | 64 | S |
| 21 | S | 65 | S |
| 22 | GND | 66 | GND |
| 23 | S | 67 | S |
| 24 | S | 68 | S |
| 25 | GND | 69 | GND |
| 26 | S | 70 | S |
| 27 | S | 71 | S |
| 28 | GND | 72 | GND |
| 29 | SE | 37 | SE |
| 30 | SE | 38 | SE |
| 31 | SE | 39 | SE |
| 32 | SE | 40 | SE |
| 33 | SE | 41 | SE |
| 34 | SE | 42 | SE |
| 35 | SE | 43 | SE |
| 36 | SE | 44 | SE |

| P1 | | P2 | |
|---|---|---|---|
| CKT | | CKT | |
| 37 | SE | 29 | SE |
| 38 | SE | 30 | SE |
| 39 | SE | 31 | SE |
| 40 | SE | 32 | SE |
| 41 | SE | 33 | SE |
| 42 | SE | 34 | SE |
| 43 | SE | 35 | SE |
| 44 | SE | 36 | SE |
| 45 | GND | 1 | GND |
| 46 | S | 2 | S |
| 47 | S | 3 | S |
| 48 | GND | 4 | GND |
| 49 | S | 5 | S |
| 50 | S | 6 | S |
| 51 | GND | 7 | GND |
| 52 | S | 8 | S |
| 53 | S | 9 | S |
| 54 | GND | 10 | GND |
| 55 | S | 11 | S |
| 56 | S | 12 | S |
| 57 | GND | 13 | GND |
| 58 | S | 14 | S |
| 59 | S | 15 | S |
| 60 | GND | 16 | GND |
| 61 | S | 17 | S |
| 62 | S | 18 | S |
| 63 | GND | 19 | GND |
| 64 | S | 20 | S |
| 65 | S | 21 | S |
| 66 | GND | 22 | GND |
| 67 | S | 23 | S |
| 68 | S | 24 | S |
| 69 | GND | 25 | GND |
| 70 | S | 26 | S |
| 71 | S | 27 | S |
| 72 | GND | 28 | GND |

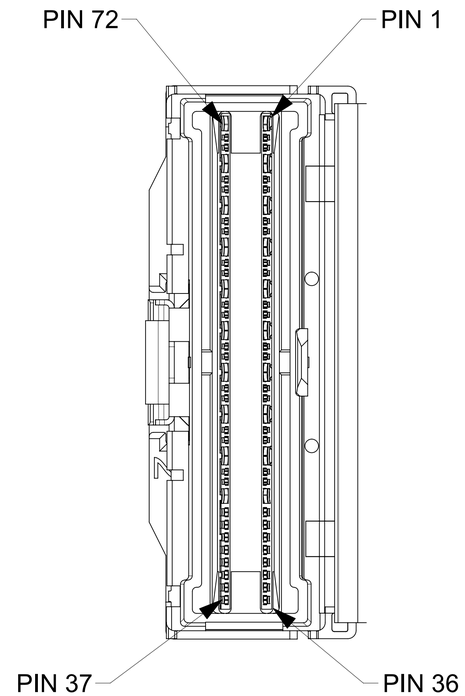


DETAIL A
SCALE 7:1

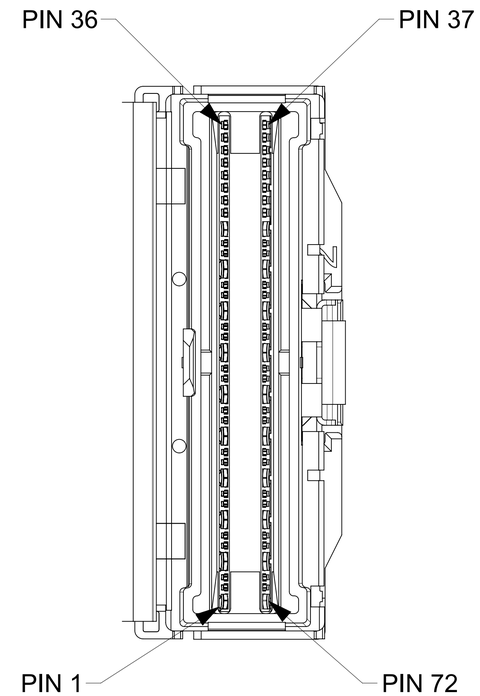


DETAIL B
SCALE 7:1

NOTE:

THIS PINOUT IS APPLICABLE FOR ALL THE SERIES LISTED BELOW:
220929 220930
220931 220932
220933 220934
220935 220936

THIS DRAWING CONTAINS INFORMATION THAT IS PROPRIETARY TO MOLEX ELECTRONIC TECHNOLOGIES, LLC AND SHOULD NOT BE USED WITHOUT WRITTEN PERMISSION

FUNCTIONAL SYMBOLS
FA = 0
FC = 0
FP = 0

DIVISIONAL SYMBOLS

DIMENSION UNITS: MM
SCALE: 1:1

GENERAL TOLERANCES (UNLESS SPECIFIED)
ANGULAR TOL ± 0.5°
4 PLACES ±
3 PLACES ±
2 PLACES ±
1 PLACE ±
0 PLACES ±

DRAFT WHERE APPLICABLE MUST REMAIN WITHIN DIMENSIONS

CURRENT REV DESC: Change Dust Cover

STATUS: Design Approved
DRWN: Jia Ling Fan 2024-03-04
CHK'D: Tony Tong 2024-03-15
APPR: Benny (Xing Qiang) He 2024-03-15

THIRD ANGLE PROJECTION
DRAWING: D-SIZE
SERIES: 220929

molex

GENERAL MARKET NS PCIE CABLE

PRODUCT SALES DRAWING

| DOCUMENT NUMBER | DOC TYPE | DOC PART | REVISION |
|---|---|---|---|
| 2209291000 | PSD | 000 | A3 |

MATERIAL NUMBER: SEE TABLE
CUSTOMER:
SHEET NUMBER: 2 OF 10

FORMAT: TLDraftA3
REVISION: B
DATE: 2022/08/01

# 220929 SERIES WITHOUT EXPANDO AND TAPE
# 220930 SERIES WITH EXPANDO AND TAPE

| FINISHED GOODS PN | DESCRIPTION | DIMENSION "L" |
|---|---|---|
| 2209290250 | RA PT DONOR 250MM | 250 |
| 2209290275 | RA PT DONOR 275MM | 275 |
| 2209290300 | RA PT DONOR 300MM | 300 |
| 2209290325 | RA PT DONOR 325MM | 325 |
| 2209290350 | RA PT DONOR 350MM | 350 |
| 2209290375 | RA PT DONOR 375MM | 375 |
| 2209290400 | RA PT DONOR 400MM | 400 |
| 2209290425 | RA PT DONOR 425MM | 425 |
| 2209290450 | RA PT DONOR 450MM | 450 |
| 2209290475 | RA PT DONOR 475MM | 475 |
| 2209290500 | RA PT DONOR 500MM | 500 |
| 2209290525 | RA PT DONOR 525MM | 525 |
| 2209290550 | RA PT DONOR 550MM | 550 |
| 2209290575 | RA PT DONOR 575MM | 575 |
| 2209290600 | RA PT DONOR 600MM | 600 |
| 2209290625 | RA PT DONOR 625MM | 625 |
| 2209290650 | RA PT DONOR 650MM | 650 |
| 2209290675 | RA PT DONOR 675MM | 675 |
| 2209290700 | RA PT DONOR 700MM | 700 |
| 2209290725 | RA PT DONOR 725MM | 725 |
| 2209290750 | RA PT DONOR 750MM | 750 |
| 2209290775 | RA PT DONOR 775MM | 775 |
| 2209290800 | RA PT DONOR 800MM | 800 |
| 2209290825 | RA PT DONOR 825MM | 825 |
| 2209290850 | RA PT DONOR 850MM | 850 |
| 2209290875 | RA PT DONOR 875MM | 875 |
| 2209290900 | RA PT DONOR 900MM | 900 |
| 2209290925 | RA PT DONOR 925MM | 925 |
| 2209290950 | RA PT DONOR 950MM | 950 |
| 2209290975 | RA PT DONOR 975MM | 975 |
| 2209291000 | RA PT DONOR 1000MM | 1000 |
| 2209291025 | RA PT DONOR 1025MM | 1025 |
| 2209291050 | RA PT DONOR 1050MM | 1050 |
| 2209291075 | RA PT DONOR 1075MM | 1075 |
| 2209291100 | RA PT DONOR 1100MM | 1100 |
| 2209291125 | RA PT DONOR 1125MM | 1125 |
| 2209291150 | RA PT DONOR 1150MM | 1150 |
| 2209291175 | RA PT DONOR 1175MM | 1175 |
| 2209291200 | RA PT DONOR 1200MM | 1200 |
| 2209291225 | RA PT DONOR 1225MM | 1225 |
| 2209291250 | RA PT DONOR 1250MM | 1250 |
| 2209291275 | RA PT DONOR 1275MM | 1275 |
| 2209291300 | RA PT DONOR 1300MM | 1300 |
| 2209291325 | RA PT DONOR 1325MM | 1325 |
| 2209291350 | RA PT DONOR 1350MM | 1350 |
| 2209291375 | RA PT DONOR 1375MM | 1375 |
| 2209291400 | RA PT DONOR 1400MM | 1400 |
| 2209291425 | RA PT DONOR 1425MM | 1425 |
| 2209291450 | RA PT DONOR 1450MM | 1450 |
| 2209291475 | RA PT DONOR 1475MM | 1475 |
| 2209291500 | RA PT DONOR 1500MM | 1500 |
| 2209291550 | RA PT DONOR 1550MM | 1550 |
| 2209291600 | RA PT DONOR 1600MM | 1600 |

| FINISHED GOODS PN | DESCRIPTION | DIMENSION "L" |
|---|---|---|
| 2209300250 | RA PT FG 250MM | 250 |
| 2209300275 | RA PT FG 275MM | 275 |
| 2209300300 | RA PT FG 300MM | 300 |
| 2209300325 | RA PT FG 325MM | 325 |
| 2209300350 | RA PT FG 350MM | 350 |
| 2209300375 | RA PT FG 375MM | 375 |
| 2209300400 | RA PT FG 400MM | 400 |
| 2209300425 | RA PT FG 425MM | 425 |
| 2209300450 | RA PT FG 450MM | 450 |
| 2209300475 | RA PT FG 475MM | 475 |
| 2209300500 | RA PT FG 500MM | 500 |
| 2209300525 | RA PT FG 525MM | 525 |
| 2209300550 | RA PT FG 550MM | 550 |
| 2209300575 | RA PT FG 575MM | 575 |
| 2209300600 | RA PT FG 600MM | 600 |
| 2209300625 | RA PT FG 625MM | 625 |
| 2209300650 | RA PT FG 650MM | 650 |
| 2209300675 | RA PT FG 675MM | 675 |
| 2209300700 | RA PT FG 700MM | 700 |
| 2209300725 | RA PT FG 725MM | 725 |
| 2209300750 | RA PT FG 750MM | 750 |
| 2209300775 | RA PT FG 775MM | 775 |
| 2209300800 | RA PT FG 800MM | 800 |
| 2209300825 | RA PT FG 825MM | 825 |
| 2209300850 | RA PT FG 850MM | 850 |
| 2209300875 | RA PT FG 875MM | 875 |
| 2209300900 | RA PT FG 900MM | 900 |
| 2209300925 | RA PT FG 925MM | 925 |
| 2209300950 | RA PT FG 950MM | 950 |
| 2209300975 | RA PT FG 975MM | 975 |
| 2209301000 | RA PT FG 1000MM | 1000 |
| 2209301025 | RA PT FG 1025MM | 1025 |
| 2209301050 | RA PT FG 1050MM | 1050 |
| 2209301075 | RA PT FG 1075MM | 1075 |
| 2209301100 | RA PT FG 1100MM | 1100 |
| 2209301125 | RA PT FG 1125MM | 1125 |
| 2209301150 | RA PT FG 1150MM | 1150 |
| 2209301175 | RA PT FG 1175MM | 1175 |
| 2209301200 | RA PT FG 1200MM | 1200 |
| 2209301225 | RA PT FG 1225MM | 1225 |
| 2209301250 | RA PT FG 1250MM | 1250 |
| 2209301275 | RA PT FG 1275MM | 1275 |
| 2209301300 | RA PT FG 1300MM | 1300 |
| 2209301325 | RA PT FG 1325MM | 1325 |
| 2209301350 | RA PT FG 1350MM | 1350 |
| 2209301375 | RA PT FG 1375MM | 1375 |
| 2209301400 | RA PT FG 1400MM | 1400 |
| 2209301425 | RA PT FG 1425MM | 1425 |
| 2209301450 | RA PT FG 1450MM | 1450 |
| 2209301475 | RA PT FG 1475MM | 1475 |
| 2209301500 | RA PT FG 1500MM | 1500 |
| 2209301550 | RA PT FG 1550MM | 1550 |
| 2209301600 | RA PT FG 1600MM | 1600 |

| FINISHED GOODS PN | DESCRIPTION | DIMENSION "L" |
|---|---|---|
| 2209291650 | RA PT DONOR 1650MM | 1650 |
| 2209291700 | RA PT DONOR 1700MM | 1700 |
| 2209291750 | RA PT DONOR 1750MM | 1750 |
| 2209291800 | RA PT DONOR 1800MM | 1800 |
| 2209291850 | RA PT DONOR 1850MM | 1850 |
| 2209291925 | RA PT DONOR 1925MM | 1925 |
| 2209292000 | RA PT DONOR 2000MM | 2000 |
| 2209292050 | RA PT DONOR 2050MM | 2050 |

| FINISHED GOODS PN | DESCRIPTION | DIMENSION "L" |
|---|---|---|
| 2209301650 | RA PT FG 1650MM | 1650 |
| 2209301700 | RA PT FG 1700MM | 1700 |
| 2209301750 | RA PT FG 1750MM | 1750 |
| 2209301800 | RA PT FG 1800MM | 1800 |
| 2209301850 | RA PT FG 1850MM | 1850 |
| 2209301925 | RA PT FG 1925MM | 1925 |
| 2209302000 | RA PT FG 2000MM | 2000 |
| 2209302050 | RA PT FG 2050MM | 2050 |

THIS DRAWING CONTAINS INFORMATION THAT IS PROPRIETARY TO MOLEX ELECTRONIC TECHNOLOGIES, LLC AND SHOULD NOT BE USED WITHOUT WRITTEN PERMISSION

FUNCTIONAL SYMBOLS
FA = 0
FC = 0
FD = 0

DIVISIONAL SYMBOLS

DIMENSION UNITS: MM
SCALE: 1:1

GENERAL TOLERANCES (UNLESS SPECIFIED)

| | | |
|---|---|---|
| ANGULAR TOL | ± | 0.5° |
| 4 PLACES | ± | |
| 3 PLACES | ± | |
| 2 PLACES | ± | |
| 1 PLACE | ± | |
| 0 PLACES | ± | |

DRAFT WHERE APPLICABLE MUST REMAIN WITHIN DIMENSIONS

CURRENT REV DESC: Change Dust Cover

STATUS: Design Approved
DRWN: Jia Ling Fan 2024-03-04
CHK'D: Tony Tong 2024-03-15
APPR: Benny (Xing Qiang) He 2024-03-15

molex

GENERAL MARKET NS PCIE CABLE

PRODUCT SALES DRAWING

| DOCUMENT NUMBER | DOC TYPE | DOC PART | REVISION |
|---|---|---|---|
| 2209291000 | PSD | 000 | A3 |

| THIRD ANGLE PROJECTION | DRAWING | SERIES | MATERIAL NUMBER | CUSTOMER | SHEET NUMBER |
|---|---|---|---|---|---|
| | D-SIZE | 220929 | SEE TABLE | | 3 OF 10 |

FORMAT TC-dwgnrd-D
REV: 2024-02-01
DATE: 2024-04-01

# 220931 & 220932 SERIES RIGHT ANGLE WITH THUMB LATCH TYPE

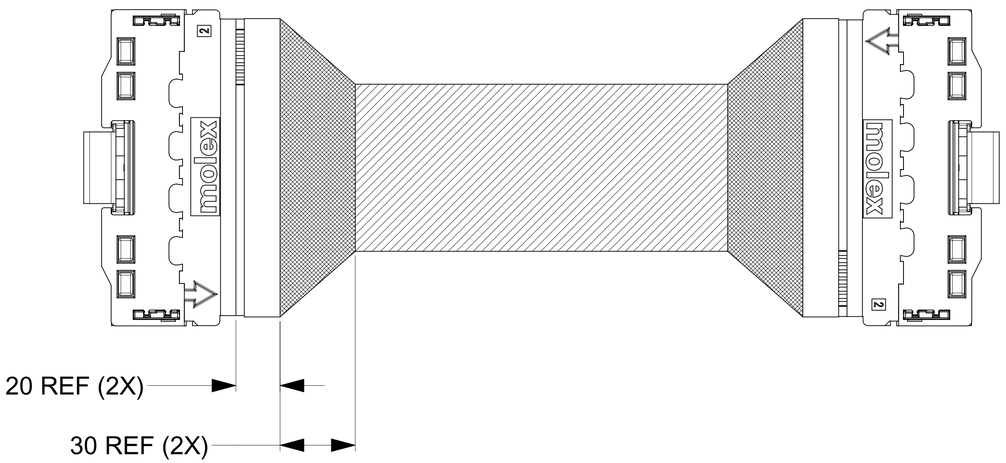


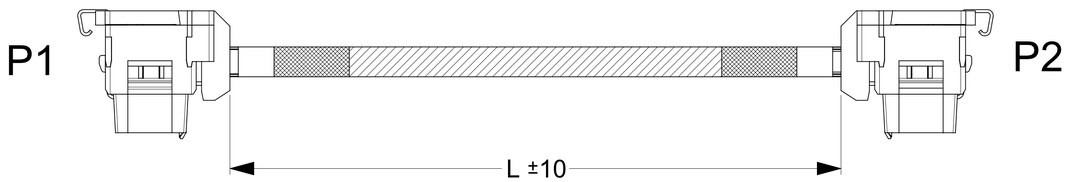


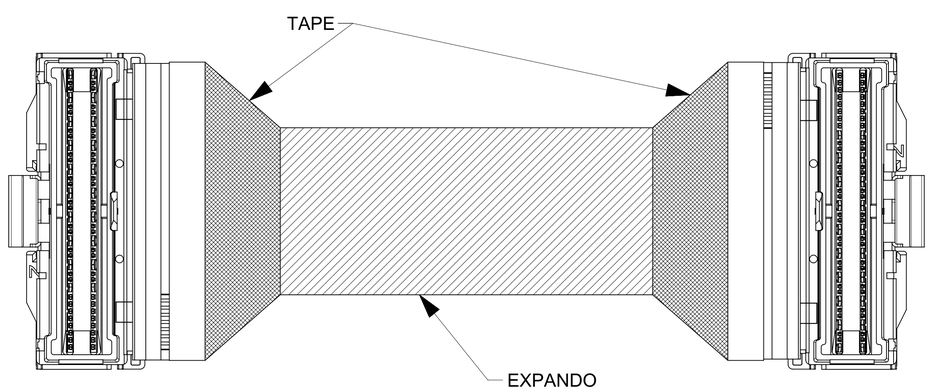


NOTE:

SEE SHEET 2 FOR PINOUT INFORMATION.

THIS DRAWING CONTAINS INFORMATION THAT IS PROPRIETARY TO MOLEX ELECTRONIC TECHNOLOGIES, LLC AND SHOULD NOT BE USED WITHOUT WRITTEN PERMISSION

| | | | |
|---|---|---|---|
| FUNCTIONAL SYMBOLS | DIMENSION UNITS: MM | SCALE: 4:1 | CURRENT REV DESC: Change Dust Cover |
| FA = 0 | GENERAL TOLERANCES (UNLESS SPECIFIED) | | |
| FC = 0 | ANGULAR TOL ± 0.5° | | |
| FP = 0 | 4 PLACES ± | | |
| DIVISIONAL SYMBOLS | 3 PLACES ± | | |
| | 2 PLACES ± | | |
| | 1 PLACE ± | | |
| | 0 PLACES ± | | |
| | DRAFT WHERE APPLICABLE MUST REMAIN WITHIN DIMENSIONS | | |

STATUS: Design Approved
DRWN: Jia Ling Fan 2024-03-04
CHK'D: Tony Tong 2024-03-15
APPR: Benny (Xing Qiang) He 2024-03-15

THIRD ANGLE PROJECTION | DRAWING: D-SIZE | SERIES: 220929

molex

GENERAL MARKET NS PCIE CABLE

PRODUCT SALES DRAWING

| DOCUMENT NUMBER | DOC TYPE | DOC PART | REVISION |
|---|---|---|---|
| 2209291000 | PSD | 000 | A3 |

| MATERIAL NUMBER | CUSTOMER | SHEET NUMBER |
|---|---|---|
| SEE TABLE | | 4 OF 10 |

FORMAT: TC-Portrait-D2
REVISION: B
DATE: 2022/08/01

# 220931 SERIES WITHOUT EXPANDO AND TAPE
# 220932 SERIES WITH EXPANDO AND TAPE

| FINISHED GOODS PN | DESCRIPTION | DIMENSION "L" |
|---|---|---|
| 2209310250 | RA TL DONOR 250MM | 250 |
| 2209310275 | RA TL DONOR 275MM | 275 |
| 2209310300 | RA TL DONOR 300MM | 300 |
| 2209310325 | RA TL DONOR 325MM | 325 |
| 2209310350 | RA TL DONOR 350MM | 350 |
| 2209310375 | RA TL DONOR 375MM | 375 |
| 2209310400 | RA TL DONOR 400MM | 400 |
| 2209310425 | RA TL DONOR 425MM | 425 |
| 2209310450 | RA TL DONOR 450MM | 450 |
| 2209310475 | RA TL DONOR 475MM | 475 |
| 2209310500 | RA TL DONOR 500MM | 500 |
| 2209310525 | RA TL DONOR 525MM | 525 |
| 2209310550 | RA TL DONOR 550MM | 550 |
| 2209310575 | RA TL DONOR 575MM | 575 |
| 2209310600 | RA TL DONOR 600MM | 600 |
| 2209310625 | RA TL DONOR 625MM | 625 |
| 2209310650 | RA TL DONOR 650MM | 650 |
| 2209310675 | RA TL DONOR 675MM | 675 |
| 2209310700 | RA TL DONOR 700MM | 700 |
| 2209310725 | RA TL DONOR 725MM | 725 |
| 2209310750 | RA TL DONOR 750MM | 750 |
| 2209310775 | RA TL DONOR 775MM | 775 |
| 2209310800 | RA TL DONOR 800MM | 800 |
| 2209310825 | RA TL DONOR 825MM | 825 |
| 2209310850 | RA TL DONOR 850MM | 850 |
| 2209310875 | RA TL DONOR 875MM | 875 |
| 2209310900 | RA TL DONOR 900MM | 900 |
| 2209310925 | RA TL DONOR 925MM | 925 |
| 2209310950 | RA TL DONOR 950MM | 950 |
| 2209310975 | RA TL DONOR 975MM | 975 |
| 2209311000 | RA TL DONOR 1000MM | 1000 |
| 2209311025 | RA TL DONOR 1025MM | 1025 |
| 2209311050 | RA TL DONOR 1050MM | 1050 |
| 2209311075 | RA TL DONOR 1075MM | 1075 |
| 2209311100 | RA TL DONOR 1100MM | 1100 |
| 2209311125 | RA TL DONOR 1125MM | 1125 |
| 2209311150 | RA TL DONOR 1150MM | 1150 |
| 2209311175 | RA TL DONOR 1175MM | 1175 |
| 2209311200 | RA TL DONOR 1200MM | 1200 |
| 2209311225 | RA TL DONOR 1225MM | 1225 |
| 2209311250 | RA TL DONOR 1250MM | 1250 |
| 2209311275 | RA TL DONOR 1275MM | 1275 |
| 2209311300 | RA TL DONOR 1300MM | 1300 |
| 2209311325 | RA TL DONOR 1325MM | 1325 |
| 2209311350 | RA TL DONOR 1350MM | 1350 |
| 2209311375 | RA TL DONOR 1375MM | 1375 |
| 2209311400 | RA TL DONOR 1400MM | 1400 |
| 2209311425 | RA TL DONOR 1425MM | 1425 |
| 2209311450 | RA TL DONOR 1450MM | 1450 |
| 2209311475 | RA TL DONOR 1475MM | 1475 |
| 2209311500 | RA TL DONOR 1500MM | 1500 |
| 2209311550 | RA TL DONOR 1550MM | 1550 |
| 2209311600 | RA TL DONOR 1600MM | 1600 |

| FINISHED GOODS PN | DESCRIPTION | DIMENSION "L" |
|---|---|---|
| 2209320250 | RA TL FG 250MM | 250 |
| 2209320275 | RA TL FG 275MM | 275 |
| 2209320300 | RA TL FG 300MM | 300 |
| 2209320325 | RA TL FG 325MM | 325 |
| 2209320350 | RA TL FG 350MM | 350 |
| 2209320375 | RA TL FG 375MM | 375 |
| 2209320400 | RA TL FG 400MM | 400 |
| 2209320425 | RA TL FG 425MM | 425 |
| 2209320450 | RA TL FG 450MM | 450 |
| 2209320475 | RA TL FG 475MM | 475 |
| 2209320500 | RA TL FG 500MM | 500 |
| 2209320525 | RA TL FG 525MM | 525 |
| 2209320550 | RA TL FG 550MM | 550 |
| 2209320575 | RA TL FG 575MM | 575 |
| 2209320600 | RA TL FG 600MM | 600 |
| 2209320625 | RA TL FG 625MM | 625 |
| 2209320650 | RA TL FG 650MM | 650 |
| 2209320675 | RA TL FG 675MM | 675 |
| 2209320700 | RA TL FG 700MM | 700 |
| 2209320725 | RA TL FG 725MM | 725 |
| 2209320750 | RA TL FG 750MM | 750 |
| 2209320775 | RA TL FG 775MM | 775 |
| 2209320800 | RA TL FG 800MM | 800 |
| 2209320825 | RA TL FG 825MM | 825 |
| 2209320850 | RA TL FG 850MM | 850 |
| 2209320875 | RA TL FG 875MM | 875 |
| 2209320900 | RA TL FG 900MM | 900 |
| 2209320925 | RA TL FG 925MM | 925 |
| 2209320950 | RA TL FG 950MM | 950 |
| 2209320975 | RA TL FG 975MM | 975 |
| 2209321000 | RA TL FG 1000MM | 1000 |
| 2209321025 | RA TL FG 1025MM | 1025 |
| 2209321050 | RA TL FG 1050MM | 1050 |
| 2209321075 | RA TL FG 1075MM | 1075 |
| 2209321100 | RA TL FG 1100MM | 1100 |
| 2209321125 | RA TL FG 1125MM | 1125 |
| 2209321150 | RA TL FG 1150MM | 1150 |
| 2209321175 | RA TL FG 1175MM | 1175 |
| 2209321200 | RA TL FG 1200MM | 1200 |
| 2209321225 | RA TL FG 1225MM | 1225 |
| 2209321250 | RA TL FG 1250MM | 1250 |
| 2209321275 | RA TL FG 1275MM | 1275 |
| 2209321300 | RA TL FG 1300MM | 1300 |
| 2209321325 | RA TL FG 1325MM | 1325 |
| 2209321350 | RA TL FG 1350MM | 1350 |
| 2209321375 | RA TL FG 1375MM | 1375 |
| 2209321400 | RA TL FG 1400MM | 1400 |
| 2209321425 | RA TL FG 1425MM | 1425 |
| 2209321450 | RA TL FG 1450MM | 1450 |
| 2209321475 | RA TL FG 1475MM | 1475 |
| 2209321500 | RA TL FG 1500MM | 1500 |
| 2209321550 | RA TL FG 1550MM | 1550 |
| 2209321600 | RA TL FG 1600MM | 1600 |

| FINISHED GOODS PN | DESCRIPTION | DIMENSION "L" |
|---|---|---|
| 2209311650 | RA TL DONOR 1650MM | 1650 |
| 2209311700 | RA TL DONOR 1700MM | 1700 |
| 2209311750 | RA TL DONOR 1750MM | 1750 |
| 2209311800 | RA TL DONOR 1800MM | 1800 |
| 2209311850 | RA TL DONOR 1850MM | 1850 |
| 2209311925 | RA TL DONOR 1925MM | 1925 |
| 2209312000 | RA TL DONOR 2000MM | 2000 |
| 2209312050 | RA TL DONOR 2050MM | 2050 |

| FINISHED GOODS PN | DESCRIPTION | DIMENSION "L" |
|---|---|---|
| 2209321650 | RA TL FG 1650MM | 1650 |
| 2209321700 | RA TL FG 1700MM | 1700 |
| 2209321750 | RA TL FG 1750MM | 1750 |
| 2209321800 | RA TL FG 1800MM | 1800 |
| 2209321850 | RA TL FG 1850MM | 1850 |
| 2209321925 | RA TL FG 1925MM | 1925 |
| 2209322000 | RA TL FG 2000MM | 2000 |
| 2209322050 | RA TL FG 2050MM | 2050 |

THIS DRAWING CONTAINS INFORMATION THAT IS PROPRIETARY TO MOLEX ELECTRONIC TECHNOLOGIES, LLC AND SHOULD NOT BE USED WITHOUT WRITTEN PERMISSION

FUNCTIONAL SYMBOLS
FA = 0
FC = 0
FP = 0

DIVISIONAL SYMBOLS

| DIMENSION UNITS | SCALE |
|---|---|
| MM | 1:1 |

GENERAL TOLERANCES (UNLESS SPECIFIED)

| | |
|---|---|
| ANGULAR TOL | ± 0.5° |
| 4 PLACES | ± |
| 3 PLACES | ± |
| 2 PLACES | ± |
| 1 PLACE | ± |
| 0 PLACES | ± |

DRAFT WHERE APPLICABLE MUST REMAIN WITHIN DIMENSIONS

CURRENT REV DESC: Change Dust Cover

STATUS: Design Approved
DRWN: Jia Ling Fan 2024-03-04
CHK'D: Tony Tong 2024-03-15
APPR: Benny (Xing Qiang) He 2024-03-15

THIRD ANGLE PROJECTION
DRAWING: D-SIZE
SERIES: 220929

molex

GENERAL MARKET NS PCIE CABLE

PRODUCT SALES DRAWING

| DOCUMENT NUMBER | DOC TYPE | DOC PART | REVISION |
|---|---|---|---|
| 2209291000 | PSD | 000 | A3 |

MATERIAL NUMBER: SEE TABLE
CUSTOMER:
SHEET NUMBER: 5 OF 10

FORMAT TC-Sheet42
REVISION: B
DATE: 2020/8/31

# 220933 & 220934 SERIES ANGLE EXIT WITH PULL TAB TYPE

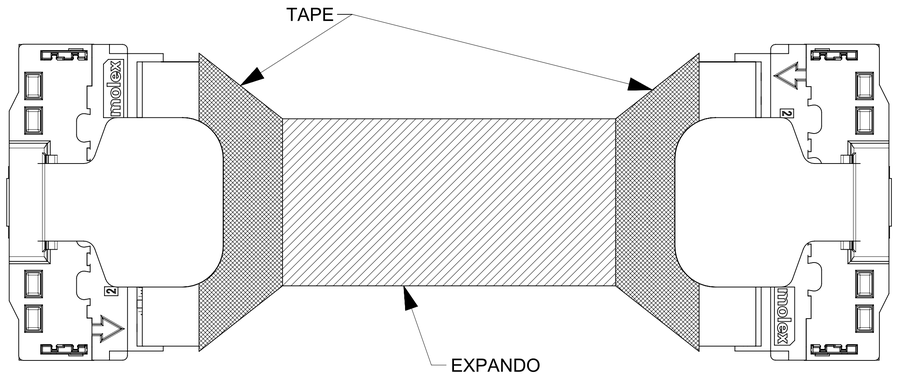


NOTE:

SEE SHEET 2 FOR PINOUT INFORMATION.

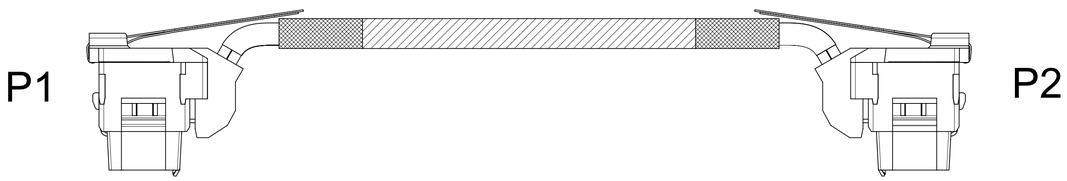


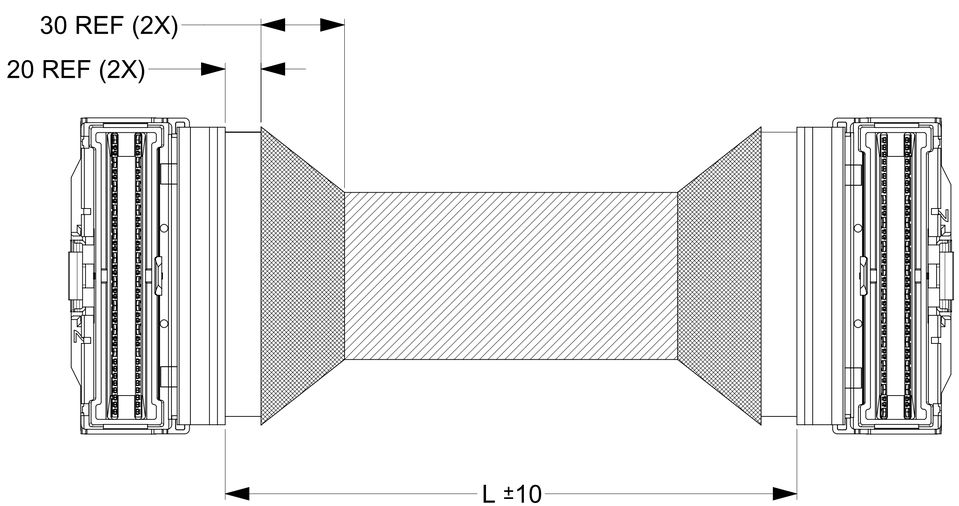


LENGTH WITH SLACK REMOVED FROM CABLE
AND HOLDING CONNECTORS AT A 60° ANGLE

| | | | |
|---|---|---|---|
| FUNCTIONAL SYMBOLS | THIS DRAWING CONTAINS INFORMATION THAT IS PROPRIETARY TO MOLEX ELECTRONIC TECHNOLOGIES, LLC AND SHOULD NOT BE USED WITHOUT WRITTEN PERMISSION | | |
| = 0 | DIMENSION UNITS: MM | SCALE: 4:1 | CURRENT REV DESC: Change Dust Cover |
| = 0 | GENERAL TOLERANCES (UNLESS SPECIFIED) | | |
| = 0 | ANGULAR TOL ± 0.5° | | |
| | 4 PLACES ± | | |
| DIVISIONAL SYMBOLS | 3 PLACES ± | | |
| | 2 PLACES ± | | |
| | 1 PLACE ± | | |
| | 0 PLACES ± | | |
| | DRAFT WHERE APPLICABLE MUST REMAIN WITHIN DIMENSIONS | | |

STATUS: Design Approved
DRWN: Jia Ling Fan 2024-03-04
CHK'D: Tony Tong 2024-03-15
APPR: Benny (Xing Qiang) He 2024-03-15

THIRD ANGLE PROJECTION | DRAWING: D-SIZE | SERIES: 220929

molex

GENERAL MARKET NS PCIE CABLE

PRODUCT SALES DRAWING

| DOCUMENT NUMBER | DOC TYPE | DOC PART | REVISION |
|---|---|---|---|
| 2209291000 | PSD | 000 | A3 |

| MATERIAL NUMBER | CUSTOMER | SHEET NUMBER |
|---|---|---|
| SEE TABLE | | 6 OF 10 |

FORMAT TC-Brand42
REVISION: B
DATE: 2022/06/01

# 220933 SERIES WITHOUT EXPANDO AND TAPE
# 220934 SERIES WITH EXPANDO AND TAPE

| FINISHED GOODS PN | DESCRIPTION | DIMENSION "L" |
|---|---|---|
| 2209330250 | AE PT DONOR 250MM | 250 |
| 2209330275 | AE PT DONOR 275MM | 275 |
| 2209330300 | AE PT DONOR 300MM | 300 |
| 2209330325 | AE PT DONOR 325MM | 325 |
| 2209330350 | AE PT DONOR 350MM | 350 |
| 2209330375 | AE PT DONOR 375MM | 375 |
| 2209330400 | AE PT DONOR 400MM | 400 |
| 2209330425 | AE PT DONOR 425MM | 425 |
| 2209330450 | AE PT DONOR 450MM | 450 |
| 2209330475 | AE PT DONOR 475MM | 475 |
| 2209330500 | AE PT DONOR 500MM | 500 |
| 2209330525 | AE PT DONOR 525MM | 525 |
| 2209330550 | AE PT DONOR 550MM | 550 |
| 2209330575 | AE PT DONOR 575MM | 575 |
| 2209330600 | AE PT DONOR 600MM | 600 |
| 2209330625 | AE PT DONOR 625MM | 625 |
| 2209330650 | AE PT DONOR 650MM | 650 |
| 2209330675 | AE PT DONOR 675MM | 675 |
| 2209330700 | AE PT DONOR 700MM | 700 |
| 2209330725 | AE PT DONOR 725MM | 725 |
| 2209330750 | AE PT DONOR 750MM | 750 |
| 2209330775 | AE PT DONOR 775MM | 775 |
| 2209330800 | AE PT DONOR 800MM | 800 |
| 2209330825 | AE PT DONOR 825MM | 825 |
| 2209330850 | AE PT DONOR 850MM | 850 |
| 2209330875 | AE PT DONOR 875MM | 875 |
| 2209330900 | AE PT DONOR 900MM | 900 |
| 2209330925 | AE PT DONOR 925MM | 925 |
| 2209330950 | AE PT DONOR 950MM | 950 |
| 2209330975 | AE PT DONOR 975MM | 975 |
| 2209331000 | AE PT DONOR 1000MM | 1000 |
| 2209331025 | AE PT DONOR 1025MM | 1025 |
| 2209331050 | AE PT DONOR 1050MM | 1050 |
| 2209331075 | AE PT DONOR 1075MM | 1075 |
| 2209331100 | AE PT DONOR 1100MM | 1100 |
| 2209331125 | AE PT DONOR 1125MM | 1125 |
| 2209331150 | AE PT DONOR 1150MM | 1150 |
| 2209331175 | AE PT DONOR 1175MM | 1175 |
| 2209331200 | AE PT DONOR 1200MM | 1200 |
| 2209331225 | AE PT DONOR 1225MM | 1225 |
| 2209331250 | AE PT DONOR 1250MM | 1250 |
| 2209331275 | AE PT DONOR 1275MM | 1275 |
| 2209331300 | AE PT DONOR 1300MM | 1300 |
| 2209331325 | AE PT DONOR 1325MM | 1325 |
| 2209331350 | AE PT DONOR 1350MM | 1350 |
| 2209331375 | AE PT DONOR 1375MM | 1375 |
| 2209331400 | AE PT DONOR 1400MM | 1400 |
| 2209331425 | AE PT DONOR 1425MM | 1425 |
| 2209331450 | AE PT DONOR 1450MM | 1450 |
| 2209331475 | AE PT DONOR 1475MM | 1475 |
| 2209331500 | AE PT DONOR 1500MM | 1500 |
| 2209331550 | AE PT DONOR 1550MM | 1550 |
| 2209331600 | AE PT DONOR 1600MM | 1600 |

| FINISHED GOODS PN | DESCRIPTION | DIMENSION "L" |
|---|---|---|
| 2209340250 | AE PT FG 250MM | 250 |
| 2209340275 | AE PT FG 275MM | 275 |
| 2209340300 | AE PT FG 300MM | 300 |
| 2209340325 | AE PT FG 325MM | 325 |
| 2209340350 | AE PT FG 350MM | 350 |
| 2209340375 | AE PT FG 375MM | 375 |
| 2209340400 | AE PT FG 400MM | 400 |
| 2209340425 | AE PT FG 425MM | 425 |
| 2209340450 | AE PT FG 450MM | 450 |
| 2209340475 | AE PT FG 475MM | 475 |
| 2209340500 | AE PT FG 500MM | 500 |
| 2209340525 | AE PT FG 525MM | 525 |
| 2209340550 | AE PT FG 550MM | 550 |
| 2209340575 | AE PT FG 575MM | 575 |
| 2209340600 | AE PT FG 600MM | 600 |
| 2209340625 | AE PT FG 625MM | 625 |
| 2209340650 | AE PT FG 650MM | 650 |
| 2209340675 | AE PT FG 675MM | 675 |
| 2209340700 | AE PT FG 700MM | 700 |
| 2209340725 | AE PT FG 725MM | 725 |
| 2209340750 | AE PT FG 750MM | 750 |
| 2209340775 | AE PT FG 775MM | 775 |
| 2209340800 | AE PT FG 800MM | 800 |
| 2209340825 | AE PT FG 825MM | 825 |
| 2209340850 | AE PT FG 850MM | 850 |
| 2209340875 | AE PT FG 875MM | 875 |
| 2209340900 | AE PT FG 900MM | 900 |
| 2209340925 | AE PT FG 925MM | 925 |
| 2209340950 | AE PT FG 950MM | 950 |
| 2209340975 | AE PT FG 975MM | 975 |
| 2209341000 | AE PT FG 1000MM | 1000 |
| 2209341025 | AE PT FG 1025MM | 1025 |
| 2209341050 | AE PT FG 1050MM | 1050 |
| 2209341075 | AE PT FG 1075MM | 1075 |
| 2209341100 | AE PT FG 1100MM | 1100 |
| 2209341125 | AE PT FG 1125MM | 1125 |
| 2209341150 | AE PT FG 1150MM | 1150 |
| 2209341175 | AE PT FG 1175MM | 1175 |
| 2209341200 | AE PT FG 1200MM | 1200 |
| 2209341225 | AE PT FG 1225MM | 1225 |
| 2209341250 | AE PT FG 1250MM | 1250 |
| 2209341275 | AE PT FG 1275MM | 1275 |
| 2209341300 | AE PT FG 1300MM | 1300 |
| 2209341325 | AE PT FG 1325MM | 1325 |
| 2209341350 | AE PT FG 1350MM | 1350 |
| 2209341375 | AE PT FG 1375MM | 1375 |
| 2209341400 | AE PT FG 1400MM | 1400 |
| 2209341425 | AE PT FG 1425MM | 1425 |
| 2209341450 | AE PT FG 1450MM | 1450 |
| 2209341475 | AE PT FG 1475MM | 1475 |
| 2209341500 | AE PT FG 1500MM | 1500 |
| 2209341550 | AE PT FG 1550MM | 1550 |
| 2209341600 | AE PT FG 1600MM | 1600 |

| FINISHED GOODS PN | DESCRIPTION | DIMENSION "L" |
|---|---|---|
| 2209331650 | AE PT DONOR 1650MM | 1650 |
| 2209331700 | AE PT DONOR 1700MM | 1700 |
| 2209331750 | AE PT DONOR 1750MM | 1750 |
| 2209331800 | AE PT DONOR 1800MM | 1800 |
| 2209331850 | AE PT DONOR 1850MM | 1850 |
| 2209331925 | AE PT DONOR 1925MM | 1925 |
| 2209332000 | AE PT DONOR 2000MM | 2000 |
| 2209332050 | AE PT DONOR 2050MM | 2050 |

| FINISHED GOODS PN | DESCRIPTION | DIMENSION "L" |
|---|---|---|
| 2209341650 | AE PT FG 1650MM | 1650 |
| 2209341700 | AE PT FG 1700MM | 1700 |
| 2209341750 | AE PT FG 1750MM | 1750 |
| 2209341800 | AE PT FG 1800MM | 1800 |
| 2209341850 | AE PT FG 1850MM | 1850 |
| 2209341925 | AE PT FG 1925MM | 1925 |
| 2209342000 | AE PT FG 2000MM | 2000 |
| 2209342050 | AE PT FG 2050MM | 2050 |

THIS DRAWING CONTAINS INFORMATION THAT IS PROPRIETARY TO MOLEX ELECTRONIC TECHNOLOGIES, LLC AND SHOULD NOT BE USED WITHOUT WRITTEN PERMISSION

FUNCTIONAL SYMBOLS
FA = 0
FC = 0
FP = 0

DIVISIONAL SYMBOLS

| DIMENSION UNITS | SCALE |
|---|---|
| MM | 1:1 |

GENERAL TOLERANCES (UNLESS SPECIFIED)

| | |
|---|---|
| ANGULAR TOL | ± 0.5° |
| 4 PLACES | ± |
| 3 PLACES | ± |
| 2 PLACES | ± |
| 1 PLACE | ± |
| 0 PLACES | ± |

DRAFT WHERE APPLICABLE MUST REMAIN WITHIN DIMENSIONS

CURRENT REV DESC: Change Dust Cover

STATUS: Design Approved
DRWN: Jia Ling Fan 2024-03-04
CHK'D: Tony Tong 2024-03-15
APPR: Benny (Xing Qiang) He 2024-03-15

THIRD ANGLE PROJECTION | DRAWING: D-SIZE | SERIES: 220929

molex

GENERAL MARKET NS PCIE CABLE

PRODUCT SALES DRAWING

| DOCUMENT NUMBER | DOC TYPE | DOC PART | REVISION |
|---|---|---|---|
| 2209291000 | PSD | 000 | A3 |

MATERIAL NUMBER: SEE TABLE | CUSTOMER | SHEET NUMBER: 7 OF 10

FORMAT TC(Alpha)=D
REVISION= B
DATE=2020/06/01

# 220935 & 220936 SERIES ANGLE EXIT WITH THUMB LATCH TYPE

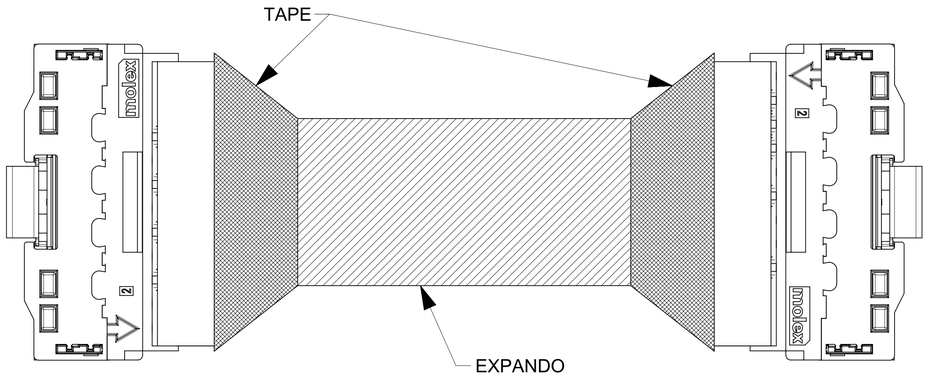


NOTE:

SEE SHEET 2 FOR PINOUT INFORMATION.

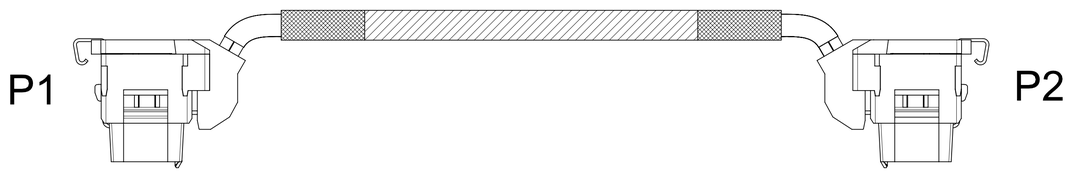


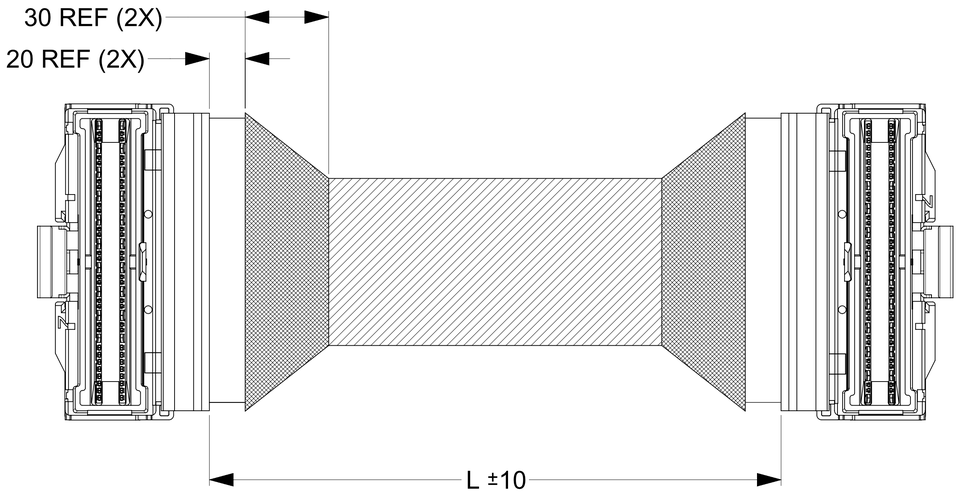


LENGTH WITH SLACK REMOVED FROM CABLE
AND HOLDING CONNECTORS AT A 60° ANGLE

| | | | |
|---|---|---|---|
| FUNCTIONAL SYMBOLS | THIS DRAWING CONTAINS INFORMATION THAT IS PROPRIETARY TO MOLEX ELECTRONIC TECHNOLOGIES, LLC AND SHOULD NOT BE USED WITHOUT WRITTEN PERMISSION | | |
| = 0 | DIMENSION UNITS: MM | SCALE: 4:1 | CURRENT REV DESC: Change Dust Cover |
| = 0 | GENERAL TOLERANCES (UNLESS SPECIFIED) | | |
| = 0 | ANGULAR TOL ± 0.5° | | |
| | 4 PLACES ± | | |
| DIVISIONAL SYMBOLS | 3 PLACES ± | | STATUS: Design Approved |
| | 2 PLACES ± | | DRWN: Jia Ling Fan 2024-03-04 |
| | 1 PLACE ± | | CHK'D: Tony Tong 2024-03-15 |
| | 0 PLACES ± | | APPR: Benny (Xing Qiang) He 2024-03-15 |
| | DRAFT WHERE APPLICABLE MUST REMAIN WITHIN DIMENSIONS | THIRD ANGLE PROJECTION | DRAWING: D-SIZE / SERIES: 220929 |

molex

GENERAL MARKET NS PCIE CABLE

PRODUCT SALES DRAWING

| DOCUMENT NUMBER | DOC TYPE | DOC PART | REVISION |
|---|---|---|---|
| 2209291000 | PSD | 000 | A3 |

| MATERIAL NUMBER | CUSTOMER | SHEET NUMBER |
|---|---|---|
| SEE TABLE | | 8 OF 10 |

# 220935 SERIES WITHOUT EXPANDO AND TAPE
# 220936 SERIES WITH EXPANDO AND TAPE

| FINISHED GOODS PN | DESCRIPTION | DIMENSION "L" |
|---|---|---|
| 2209350250 | AE TL DONOR 250MM | 250 |
| 2209350275 | AE TL DONOR 275MM | 275 |
| 2209350300 | AE TL DONOR 300MM | 300 |
| 2209350325 | AE TL DONOR 325MM | 325 |
| 2209350350 | AE TL DONOR 350MM | 350 |
| 2209350375 | AE TL DONOR 375MM | 375 |
| 2209350400 | AE TL DONOR 400MM | 400 |
| 2209350425 | AE TL DONOR 425MM | 425 |
| 2209350450 | AE TL DONOR 450MM | 450 |
| 2209350475 | AE TL DONOR 475MM | 475 |
| 2209350500 | AE TL DONOR 500MM | 500 |
| 2209350525 | AE TL DONOR 525MM | 525 |
| 2209350550 | AE TL DONOR 550MM | 550 |
| 2209350575 | AE TL DONOR 575MM | 575 |
| 2209350600 | AE TL DONOR 600MM | 600 |
| 2209350625 | AE TL DONOR 625MM | 625 |
| 2209350650 | AE TL DONOR 650MM | 650 |
| 2209350675 | AE TL DONOR 675MM | 675 |
| 2209350700 | AE TL DONOR 700MM | 700 |
| 2209350725 | AE TL DONOR 725MM | 725 |
| 2209350750 | AE TL DONOR 750MM | 750 |
| 2209350775 | AE TL DONOR 775MM | 775 |
| 2209350800 | AE TL DONOR 800MM | 800 |
| 2209350825 | AE TL DONOR 825MM | 825 |
| 2209350850 | AE TL DONOR 850MM | 850 |
| 2209350875 | AE TL DONOR 875MM | 875 |
| 2209350900 | AE TL DONOR 900MM | 900 |
| 2209350925 | AE TL DONOR 925MM | 925 |
| 2209350950 | AE TL DONOR 950MM | 950 |
| 2209350975 | AE TL DONOR 975MM | 975 |
| 2209351000 | AE TL DONOR 1000MM | 1000 |
| 2209351025 | AE TL DONOR 1025MM | 1025 |
| 2209351050 | AE TL DONOR 1050MM | 1050 |
| 2209351075 | AE TL DONOR 1075MM | 1075 |
| 2209351100 | AE TL DONOR 1100MM | 1100 |
| 2209351125 | AE TL DONOR 1125MM | 1125 |
| 2209351150 | AE TL DONOR 1150MM | 1150 |
| 2209351175 | AE TL DONOR 1175MM | 1175 |
| 2209351200 | AE TL DONOR 1200MM | 1200 |
| 2209351225 | AE TL DONOR 1225MM | 1225 |
| 2209351250 | AE TL DONOR 1250MM | 1250 |
| 2209351275 | AE TL DONOR 1275MM | 1275 |
| 2209351300 | AE TL DONOR 1300MM | 1300 |
| 2209351325 | AE TL DONOR 1325MM | 1325 |
| 2209351350 | AE TL DONOR 1350MM | 1350 |
| 2209351375 | AE TL DONOR 1375MM | 1375 |
| 2209351400 | AE TL DONOR 1400MM | 1400 |
| 2209351425 | AE TL DONOR 1425MM | 1425 |
| 2209351450 | AE TL DONOR 1450MM | 1450 |
| 2209351475 | AE TL DONOR 1475MM | 1475 |
| 2209351500 | AE TL DONOR 1500MM | 1500 |
| 2209351550 | AE TL DONOR 1550MM | 1550 |
| 2209351600 | AE TL DONOR 1600MM | 1600 |

| FINISHED GOODS PN | DESCRIPTION | DIMENSION "L" |
|---|---|---|
| 2209360250 | AE TL FG 250MM | 250 |
| 2209360275 | AE TL FG 275MM | 275 |
| 2209360300 | AE TL FG 300MM | 300 |
| 2209360325 | AE TL FG 325MM | 325 |
| 2209360350 | AE TL FG 350MM | 350 |
| 2209360375 | AE TL FG 375MM | 375 |
| 2209360400 | AE TL FG 400MM | 400 |
| 2209360425 | AE TL FG 425MM | 425 |
| 2209360450 | AE TL FG 450MM | 450 |
| 2209360475 | AE TL FG 475MM | 475 |
| 2209360500 | AE TL FG 500MM | 500 |
| 2209360525 | AE TL FG 525MM | 525 |
| 2209360550 | AE TL FG 550MM | 550 |
| 2209360575 | AE TL FG 575MM | 575 |
| 2209360600 | AE TL FG 600MM | 600 |
| 2209360625 | AE TL FG 625MM | 625 |
| 2209360650 | AE TL FG 650MM | 650 |
| 2209360675 | AE TL FG 675MM | 675 |
| 2209360700 | AE TL FG 700MM | 700 |
| 2209360725 | AE TL FG 725MM | 725 |
| 2209360750 | AE TL FG 750MM | 750 |
| 2209360775 | AE TL FG 775MM | 775 |
| 2209360800 | AE TL FG 800MM | 800 |
| 2209360825 | AE TL FG 825MM | 825 |
| 2209360850 | AE TL FG 850MM | 850 |
| 2209360875 | AE TL FG 875MM | 875 |
| 2209360900 | AE TL FG 900MM | 900 |
| 2209360925 | AE TL FG 925MM | 925 |
| 2209360950 | AE TL FG 950MM | 950 |
| 2209360975 | AE TL FG 975MM | 975 |
| 2209361000 | AE TL FG 1000MM | 1000 |
| 2209361025 | AE TL FG 1025MM | 1025 |
| 2209361050 | AE TL FG 1050MM | 1050 |
| 2209361075 | AE TL FG 1075MM | 1075 |
| 2209361100 | AE TL FG 1100MM | 1100 |
| 2209361125 | AE TL FG 1125MM | 1125 |
| 2209361150 | AE TL FG 1150MM | 1150 |
| 2209361175 | AE TL FG 1175MM | 1175 |
| 2209361200 | AE TL FG 1200MM | 1200 |
| 2209361225 | AE TL FG 1225MM | 1225 |
| 2209361250 | AE TL FG 1250MM | 1250 |
| 2209361275 | AE TL FG 1275MM | 1275 |
| 2209361300 | AE TL FG 1300MM | 1300 |
| 2209361325 | AE TL FG 1325MM | 1325 |
| 2209361350 | AE TL FG 1350MM | 1350 |
| 2209361375 | AE TL FG 1375MM | 1375 |
| 2209361400 | AE TL FG 1400MM | 1400 |
| 2209361425 | AE TL FG 1425MM | 1425 |
| 2209361450 | AE TL FG 1450MM | 1450 |
| 2209361475 | AE TL FG 1475MM | 1475 |
| 2209361500 | AE TL FG 1500MM | 1500 |
| 2209361550 | AE TL FG 1550MM | 1550 |
| 2209361600 | AE TL FG 1600MM | 1600 |

| FINISHED GOODS PN | DESCRIPTION | DIMENSION "L" |
|---|---|---|
| 2209351650 | AE TL DONOR 1650MM | 1650 |
| 2209351700 | AE TL DONOR 1700MM | 1700 |
| 2209351750 | AE TL DONOR 1750MM | 1750 |
| 2209351800 | AE TL DONOR 1800MM | 1800 |
| 2209351850 | AE TL DONOR 1850MM | 1850 |
| 2209351925 | AE TL DONOR 1925MM | 1925 |
| 2209352000 | AE TL DONOR 2000MM | 2000 |
| 2209352050 | AE TL DONOR 2050MM | 2050 |

| FINISHED GOODS PN | DESCRIPTION | DIMENSION "L" |
|---|---|---|
| 2209361650 | AE TL FG 1650MM | 1650 |
| 2209361700 | AE TL FG 1700MM | 1700 |
| 2209361750 | AE TL FG 1750MM | 1750 |
| 2209361800 | AE TL FG 1800MM | 1800 |
| 2209361850 | AE TL FG 1850MM | 1850 |
| 2209361925 | AE TL FG 1925MM | 1925 |
| 2209362000 | AE TL FG 2000MM | 2000 |
| 2209362050 | AE TL FG 2050MM | 2050 |

FUNCTIONAL SYMBOLS
FA = 0
FC = 0
FE = 0
DIVISIONAL SYMBOLS

THIS DRAWING CONTAINS INFORMATION THAT IS PROPRIETARY TO MOLEX ELECTRONIC TECHNOLOGIES, LLC AND SHOULD NOT BE USED WITHOUT WRITTEN PERMISSION

DIMENSION UNITS: MM
SCALE: 1:1
GENERAL TOLERANCES (UNLESS SPECIFIED)
ANGULAR TOL ± 0.5°
4 PLACES ±
3 PLACES ±
2 PLACES ±
1 PLACE ±
0 PLACES ±
DRAFT WHERE APPLICABLE MUST REMAIN WITHIN DIMENSIONS

CURRENT REV DESC: Change Dust Cover

STATUS: Design Approved
DRWN: Jia Ling Fan 2024-03-04
CHK'D: Tony Tong 2024-03-15
APPR: Benny (Xing Qiang) He 2024-03-15

THIRD ANGLE PROJECTION
DRAWING: D-SIZE
SERIES: 220929

molex

GENERAL MARKET NS PCIE CABLE

PRODUCT SALES DRAWING

| DOCUMENT NUMBER | DOC TYPE | DOC PART | REVISION |
|---|---|---|---|
| 2209291000 | PSD | 000 | A3 |

MATERIAL NUMBER: SEE TABLE
CUSTOMER:
SHEET NUMBER: 9 OF 10

FORMAT TC(Alpha)=D
REVISION: B
DATE: 2020-06-01

| REVISION HISTORY | | | |
|---|---|---|---|
| DATE | REVISION | DESCRIPTION | ENGINEER |
| 2022/06/09 | 1 | PRELIMINARY RELEASE | MARTIN FAN |
| 2022/06/23 | A | INITIAL RELEASE | MARTIN FAN |
| 2022/07/25 | A1 | ADD LASER MARK CONTENT INFORMATION AND REMOVE ORGANIZER PN. | ALVIN ZHANG |
| 2022/12/01 | A2 | ADD ADDITIONAL LENGTH OPTION (1650 1700 1750 1800 1850 2000 2050) FOR ALL 220929 TO 220936 SERIES | MARTIN FAN |
| 2024/03/08 | A3 | UP REVISION FOR REFLECTING THE DUST COVER CHANGE | MARTIN FAN |

THIS DRAWING CONTAINS INFORMATION THAT IS PROPRIETARY TO MOLEX ELECTRONIC TECHNOLOGIES, LLC AND SHOULD NOT BE USED WITHOUT WRITTEN PERMISSION

FUNCTIONAL SYMBOLS
FA = 0
FC = 0
FD = 0

DIVISIONAL SYMBOLS

| DIMENSION UNITS | SCALE |
|---|---|
| MM | 1:1 |

GENERAL TOLERANCES (UNLESS SPECIFIED)

| | | |
|---|---|---|
| ANGULAR TOL | ± | 0.5° |
| 4 PLACES | ± | |
| 3 PLACES | ± | |
| 2 PLACES | ± | |
| 1 PLACE | ± | |
| 0 PLACES | ± | |

DRAFT WHERE APPLICABLE MUST REMAIN WITHIN DIMENSIONS

CURRENT REV DESC: Change Dust Cover

STATUS: Design Approved
DRWN: Jia Ling Fan 2024-03-04
CHK'D: Tony Tong 2024-03-15
APPR: Benny (Xing Qiang) He 2024-03-15

THIRD ANGLE PROJECTION | DRAWING: D-SIZE | SERIES: 220929

molex

GENERAL MARKET NS PCIE CABLE

PRODUCT SALES DRAWING

| DOCUMENT NUMBER | DOC TYPE | DOC PART | REVISION |
|---|---|---|---|
| 2209291000 | PSD | 000 | A3 |

MATERIAL NUMBER: SEE TABLE | CUSTOMER | SHEET NUMBER: 10 OF 10

FORMAT TC(Alpha)0
REVISION: B
DATE: 2020/06/01